P/NO : AFN31729518

JANUARY, 2007

SERVICE MANUAL

MODEL : V280

LG

http://biz.lgservice.com

DVD-VCR

SERVICE MANUAL

MODEL : V280

CAUTION

BEFORE SERVICING THE UNIT, READ THE “SAFETY PRECAUTIONS” IN THIS MANUAL.

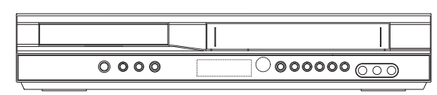

CONTENTS

SECTION 1 . . . . SUMMARY
SECTION 2 . . . . CABINET & MAIN CHASSIS
SECTION 3 . . . . ELECTRICAL
SECTION 4 . . . . MECHANISM OF VCR PART
SECTION 5 . . . . MECHANISM OF DVD PART
SECTION 6 . . . . REPLACEMENT PARTS LIST

SECTION 1

SUMMARY

CONTENTS

PRODUCT SAFETY SERVICING GUIDELINES FOR DVD+VCR PRODUCTS 1-3
SERVICING PRECAUTIONS 1-4
- General Servicing Precautions
- Insulation Checking Prodedure
- Electrostatically Sensitive Devices

SERVICE INFORMATION FOR EEPROM IC SETTING(VCR)..... 1-5
SERVICE INFORMATION FOR EEPROM (DVD)..... 1-6
SPECIFICATIONS 1-7

PRODUCT SAFETY SERVICING GUIDELINES FOR DVD+VCR PRODUCTS

CAUTION : DO NOT ATTEMPT TO MODIFY THIS PRODUCT IN ANY WAY, NEVER PERFORM CUSTOMIZED INSTALLATIONS WITHOUT MANUFACTURER'S APPROVAL. UNAUTHORIZED MODIFICATIONS WILL NOT ONLY VOID THE WARRANTY, BUT MAY LEAD TO YOUR BEING LIABLE FOR ANY RESULTING PROPERTY DAMAGE OR USER INJURY.

SERVICE WORK SHOULD BE PERFORMED ONLY AFTER YOU ARE THOROUGHLY FAMILIAR WITH ALL OF THE FOLLOWING SAFETY CHECKS AND SERVICING GUIDELINES. TO DO OTHERWISE, INCREASES THE RISK OF POTENTIAL HAZARDS AND INJURY TO THE USER.

WHILE SERVICING, USE AN ISOLATION TRANSFORMER FOR PROTECTION FROM A.C. LINE SHOCK.

SAFETY CHECKS

AFTER THE ORIGINAL SERVICE PROBLEM HAS BEEN CORRECTED. A CHECK SHOULD BE MADE OF THE FOLLOWING.

SUBJECT : FIRE & SHOCK HAZARD

1. BE SURE THAT ALL COMPONENTS ARE POSITIONED IN SUCH A WAY AS TO AVOID POSSIBILITY OF ADJACENT COMPONENT SHORTS. THIS IS ESPECIALLY IMPORTANT ON THOSE MODULES WHICH ARE TRANSPORTED TO AND FROM THE REPAIR SHOP.
2. NEVER RELEASE A REPAIR UNLESS ALL PROTECTIVE DEVICES SUCH AS INSULATORS, BARRIERS, COVERS, SHIELDS, STRAIN RELIEFS, POWER SUPPLY CORDS, AND OTHER HARDWARE HAVE BEEN REINSTALLED PER ORIGINAL DESIGN. BE SURE THAT THE SAFETY PURPOSE OF THE POLARIZED LINE PLUG HAS NOT BEEN DEFEATED.
3. SOLDERING MUST BE INSPECTED TO DISCOVER POSSIBLE COLD SOLDER JOINTS, SOLDER SPLASHES OR SHARP SOLDER POINTS. BE CERTAIN TO REMOVE ALL LOOSE FOREIGN PARTICLES.
4. CHECK FOR PHYSICAL EVIDENCE OF DAMAGE OR DETERIORATION TO PARTS AND COMPONENTS. FOR FRAYED LEADS, DAMAGED INSULATION (INCLUDING A.C. CORD). AND REPLACE IF NECESSARY FOLLOW ORIGINAL LAYOUT, LEAD LENGTH AND DRESS.
5. NO LEAD OR COMPONENT SHOULD TOUCH A RECIVING TUBE OR A RESISTOR RATED AT 1 WATT OR MORE. LEAD TENSION AROUND PROTRUNING METAL SURFACES MUST BE AVOIDED.
6. ALL CRITICAL COMPONENTS SUCH AS FUSES, FLAMEPROOF RESISTORS, CAPACITORS, ETC. MUST BE REPLACED WITH EXACT FACTORY TYPES, DO NOT USE REPLACEMENT COMPONENTS OTHER THAN THOSE SPECIFIED OR MAKE UNRECOMMENDED CIRCUIT MODIFICATIONS.
7. AFTER RE-ASSEMBLY OF THE SET ALWAYS PERFORM AN A.C. LEAKAGE TEST ON ALL EXPOSED METALLIC PARTS OF THE CABINET, (THE CHANNEL SELECTOR KNOB, ANTENNA TERMINALS. HANDLE AND SCREWS) TO BE SURE THE SET IS SAFE TO OPERATE WITHOUT DANGER OF ELECTRICAL SHOCK. DO NOT USE A LINE ISOLATION TRANSFORMER DURING THIS TEST USE AN A.C. VOLTMETER, HAVING 5000 OHMS PER VOLT OR MORE SENSITIVITY, IN THE FOLLOWING MANNER; CONNECT A 1500 OHM 10 WATT RESISTOR, PARALLELED BY A .15 MFD. 150.V A.C TYPE CAPACITOR BETWEEN A KNOWN GOOD EARTH GROUND (WATER PIPE, CONDUIT, ETC.) AND THE EXPOSED METALLIC PARTS, ONE AT A TIME. MEASURE THE A.C. VOLTAGE ACROSS THE COMBINATION OF 1500 OHM RESISTOR AND .15 MFD CAPACITOR. REVERSE THE A.C. PLUG AND REPEAT A.C. VOLTAGE MEASUREMENTS FOR EACH EXPOSED METALLIC PART. VOLTAGE MEASURED MUST NOT EXCEED 75 VOLTS R.M.S. THIS CORRESPONDS TO 0.5 MILLIAMP A.C ANY VALUE EXCEEDING THIS LIMIT CONSTITUTES A POTENTIAL SHOCK HAZARD AND MUST BE CORRECTED IMMEDIATELY.

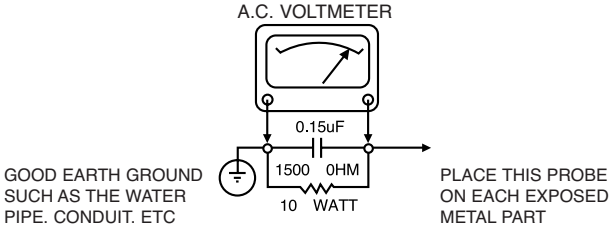

SUBJECT: GRAPHIC SYMBOLS

THE LIGHTNING FLASH WITH APROWHEAD SYMBOL. WITHIN AN EQUILATERAL TRIANGLE, IS INTENDED TO ALERT THE SERVICE PERSONNEL TO THE PRESENCE OF UNINSULATED "DANGEROUS VOLTAGE" THAT MAY BE OF SUFFICIENT MAGNITUDE TO CONSTITUTE A RISK OF ELECTRIC SHOCK.

THE EXCLAMATION POINT WITHIN AN EQUILATERAL TRIANGLE IS INTENDED TO ALERT THE SERVICE PERSONNEL TO THE PRESENCE OF IMPORTANT SAFETY INFORMATION IN SERVICE LITERATURE.

SUBJECT : X-RADIATION

1. BE SURE PROCEDURES AND INSTRUCTIONS TO ALL SERVICE PERSONNEL COVER THE SUBJECT OF X-RADIATION. THE ONLY POTENTIAL SOURCE OF X-RAYS IN CURRENT T.V. RECEIVERS IS THE PICTURE TUBE. HOWEVER, THIS TUBE DOES NOT EMIT X-RAYS WHEN THE HIGH VOLTAGE IS AT THE FACTORY SPECIFIED LEVEL. THE PROPER VALUE IS GIVEN IN THE APPLICABLE SCHEMATIC. OPERATION AT HIGHER VOLTAGES MAY CAUSE A FAILURE OF THE PICTURE TUBE OR HIGH VOLTAGE SUPPLY AND, UNDER CERTAIN CIRCUMSTANCES, MAY PRODUCE RADIATION IN EXCESS OF DESIRABLE LEVELS.
2. ONLY FACTORY SPECIFIED C.R.T. ANODE CONNECTORS MUST BE USED. DEGAUSSING SHIELDS ALSO SERVE AS X-RAY SHIELD IN COLOR SETS, ALWAYS RE-INSTALL THEM.
3. IT IS ESSNTIAL THAT SERVICE PERSONNEL HAVE AVAILABLE AN ACCURATE AND RELIABLE HIGH VOLTAGE METER. THE CALIBRA TION OF THE METER SHOULD BE CHECKED PERIODICALLY AGAINST A REFERENCE STANDARD, SUCH AS THE ONE AVAILABLE AT YOUR DISTRIBUTOR.
4. WHEN THE HIGH VOLTAGE CIRCUITRY IS OPERATING PROPERLY THERE IS NO POSSIBILITY OF AN X-RADIATION PROBLEM. EVERY TIME A COLOR CHASSIS IS SERVICED. THE BRIGHTNESS SHOULD BE RUN UP AND DOWN WHILE MONITORING THE HIGH VOLTAGE WITH A METER TO BE CERTAIN THAT THE HIGH VOLTAGE DOES NOT EXCEED THE SPECIFIED VALUE AND THAT IT IS REGULATING CORRECTLY, WE SUGGEST THAT YOU AND YOUR SERVICE ORGANIZATION REVIEW TEST PROCEDURES SO THAT VOLTAGE REGULATION IS ALWAYS CHECKED AS A STANDARD SERVICING PROCEDURE. AND THAT THE HIGH VOLTAGE READING BE RECORDER ON EACH CUSTOMER'S INVOICE.
5. WHEN TROUBLESHOOTING AND MAKING TEST MEASUREMENTS IN A PRODUCT WITH A PROBLEM OF EXCESSIVE HIGH VOLTAGE, AVOID BEING UNNECESSARILY CLOSE TO THE PICTURE TUBE AND THE HIGH VOLTAGE SUPPLY. DO NOT OPERATE THE PRODUCT LONGER THAN IS NECESSARY TO LOCATE THE CAUSE OF EXCES SIVE VOLTAGE.
6. REFER TO HV. B+ AND SHUTDOWN ADJUSTMENT PROCEDURES DESCRIBED IN THE APPROPRIATE SCHEMATIC AND DIAGRAMS (WHERE USED).

SUBJECT: IMPLOSION

1. ALL DIRECT VIEWED PICTURE TUBES ARE EQUIPPED WITH AN INTE GRAL IMPLOSION PROTECTION SYSTEM, BUT CARE SHOULD BE TAKEN TO AVOID DAMAGE DURING INSTALLATION, AVOID SCRATCHING THE TUBE. IF SCRATCHED REPLACE IT.
2. USE ONLY RECOMMENDED FACTORY REPLACEMENT TUBES.

SUBJECT : TIPS ON PROPER INSTALLATION

1. NEVER INSTALL ANY PRODUCT IN A CLOSED-IN RECESS, CUBBYHOLE OR CLOSELY FITTING SHELF SPACE. OVER OR CLOSE TO HEAT DUCT, OR IN THE PATH OF HEATED AIR FLOW.
2. AVOID CONDITIONS OF HIGH HUMIDITY SUCH AS: OUTDOOR PATIO INSTALLATIONS WHERE DEW IS A FACTOR, NEAR STEAM RADIATORS WHERE STEAM LEAKAGE IS A FACTOR, ETC.
3. AVOID PALCEMENT WHERE DRAPERIES MAY OBSTRUCT REAR VENTING. THE CUSTOMER SHOULD ALSO AVOID THE USE OF DECORATIVE SCARVES OR OTHER COVERINGS WHICH MIGHT OBSTRUCT VENTILATION.
4. WALL AND SHELF MOUNTED INSTALLATIONS USING A COMMERCIAL MOUNTING KIT. MUST FOLLOW THE FACTORY APPROVED MOUNTING INSTRUCTIONS A PRODUCT MOUNTED TO A SHELF OR PLATFORM MUST RETAIN ITS ORIGINAL FEET (OR THE EQUIVALENT THICKNESS IN SPACERS) TO PROVIDE ADEQUATE AIR FLOW ACROSS THE BOTTOM, BOLTS OR SCREWS USED FOR FASTENERS MUST NOT TOUCH ANY PARTS OR WIRING. PERFORM LEAKAGE TEST ON CUSTOMIZED INSTALLATIONS.
5. CAUTION CUSTOMERS AGAINST THE MOUNTING OF A PRODUCT ON SLOPING SHELF OR A TILTED POSITION, UNLESS THE PRODUCT IS PROPERLY SECURED.
6. A PRODUCT ON A ROLL-ABOUT CART SHOULD BE STABLE ON ITS MOUNTING TO THE CART. CAUTION THE CUSTOMER ON THE HAZARDS OF TRYING TO ROLL A CART WITH SMALL CASTERS ACROSS THRESHOLDS OR DEEP PILE CARPETS.
7. CAUTION CUSTOMERS AGAINST THE USE OF A CART OR STAND WHICH HAS NOT BEEN LISTED BY UNDERWRITERS LABORATORIES, INC. FOR USE WITH THEIR SPECIFIC MODEL OF TELEVISION RECEIVER OR GENERICALLY APPROVED FOR USE WITH T.V.'S OF THE SAME OR LARGER SCREEN SIZE.
8. CAUTION CUSTOMERS AGAINST THE USE OF EXTENSION CORDS, EXPLAIN THAT A FOREST OF EXTENSIONS SPROUTING FROM A SINGLE OUTLET CAN LEAD TO DISASTROUS CONSEQUENCES TO HOME AND FAMILY.

SERVICING PRECAUTIONS

CAUTION : Before servicing the VCR+DVD covered by this service data and its supplements and addends, read and follow the SAFETY PRECAUTIONS. NOTE : if unforeseen circumstances create conflict between the following servicing precautions and any of the safety precautions in this publications, always follow the safety precautions.
Remembers Safety First:

General Servicing Precautions

1. Always unplug the VCR+DVD AC power cord from the AC power source before:
   (1) Removing or reinstalling any component, circuit board, module, or any other assembly.
   (2) Disconnection or reconnecting any internal electrical plug or other electrical connection.
   (3) Connecting a test substitute in parallel with an electrolytic capacitor.
   Caution : A wrong part substitution or incorrect polarity installation of electrolytic capacitors may result in an explosion hazard.

2. Do not spray chemicals on or near this VCR+DVD or any of its assemblies.

3. Unless specified otherwise in this service data, clean electrical contacts by applying an appropriate contact cleaning solution to the contacts with a pipe cleaner, cotton-tipped swab, or comparable soft applicator.
   Unless specified otherwise in this service data, lubrication of contacts is not required.

4. Do not defeat any plug/socket B+ voltage interlocks with whitch instruments covered by this service manual might be equipped.

5. Do not apply AC power to this VCR+DVD and/or any of its electrical assemblies unless all solid-state device heat sinks are cerrectly installed.

6. Always connect test instrument ground lead to the appropriate ground before connection the test instrument positive lead. Always remove the test instrument ground lead last.

Insulation Checking Procedure

Disconnect the attachment plug from the AC outlet and turn the power on. Connect an insulation resistance meter(500V) to the blades of the attachment plug. The insulation resistance between each blade of the attachment plug and accessible conductive parts (Note 1) should be more than 1M-ohm.
Note 1 : Accessible Conductive Parts including Metal panels, Input terminals, Earphone jacks, etc.

Electrostatically Sensitive (ES) Devices

Some semiconductor (solid state) devices can be damaged easily by static electricity. Such components commonly are called Electrostatically Sensitive (ES) Devices. Examples of typical ES devices are integrated circuits and some field effect transistors and semiconductor chip components.
The following techniques should be used to help reduce the incidence of component damage caused by static electricity.

1. Immediately before handling any semiconductor component or semiconductor-equipped assembly, drain off any electrostatic charge on your body by touching a known earth ground. Alternatively, obtain and wear a commercially available discharging wrist strap device, which should be removed for potential shock reasons prior to applying power to the unit under test.

2. After removing an electrical assembly equipped with ES devices, place the assembly on a conductive surface such as aluminum foil, to prevent electrostatic charge buildup or exposure of the assembly.

3. Use only a grouned-tip soldering iron to solder or unsolder ES devices.

4. Use only an anti-static solder removal device. Some solder removal devices not classified a “anti-static” can generate electrical charges sufficient to damage ES devices.

5. Do not use freon-propelled chemicals. These can generate electrical charge sufficient to damage ES devices.

6. Do not remove a replacement ES device from its protec tive package until immediately before you are ready to install it. (Most replacement ES devices are packaged with leads electrically shorted together by conductive foam, aluminum foil, or comparable conductive material).

7. Immediately before removing the protective material from the leads of a replacement ES device, touch the protective material to the chassis or circuit assembly into which the device will be installed.

   Caution : Be sure no power is applied to the chassis or circuit, and observe all other safety precautions.

8. Minimize bodily motions when handling unpackaged replacement ES devices. (Normally harmless motion such as the brushing together of your clothes fabric or the lifting of your foot from a carpeted floor can generate static electricity sufficient to damage an ES device.)

SERVICE INFORMATION FOR EEPROM IC SETTING(VCR)

EEPROM option code No. setting

NAME	HEX	BINARY
OPT0	00	00000000
OPT1	00	00000000
OPT2	00	00000000
OPT3	00	00000000
OPT4	00	00000000
OPT5	00	00000000

12/26 - 00 V00 <--- μ-COM Ver.
ID : LG
VERSION : 05 ROM
DATE : 02.17.05 Correction Ver.

MODEL	NAME	HEX	BINARY
V280	OPT0	00	00000000
	OPT1	00	00000000
	OPT2	00	00000000
	OPT3	00	00000000
	OPT4	00	00000000
	OPT5	00	00000000

WR : OK I : EXIT MOVE : ◄ ►
EDIT : ▲▼

*** REFER to Page 6-1.**

EEPROM option code No. setting procedure

1. DETECT NEW EEPROM (OPTION EDIT SCREEN)
   - Eeprom EDIT screen automatically appears if replacing Eeprom.
   - Setup option data using the cursor Up/Down key of a remote control.
     (Setup upon BOM depending on OPT0~OPT5 model)
   - Since an initial remote control is set to LG for LG model, appropriately set optiona data using the cursor Up/Down key.

2. EEPROM WRITED AND EEPROM INITIAL
   - Writes data on EEPROM by using REMOCON "OK" + FRONT PLAY KEY FOR MORE THAN 5 SECONDS.

3. PG ADJUST
   1) Payback the SP standard tape
   2) Press the “OK” key on the Remote controller and the “PLAY” key on the Front Panel the same time, then it goes in to Tracking initial mode.
   3) Repeat the above step(No.2), then it finishes the PG adjusting automatically.
   4) Stop the playback, then it goes out to PG adjusting mode after mony the PG data.

4. BUYER SELECTION
   - Font ejection key + open/close key for more than 5 seconds.
   - Option code is displayed in TV
   - First byte of OPTO is changed whenever front eject key + open/close key.
   - LG remote conroller No.0.

SERVICE INFORMATION FOR EEPROM (DVD)

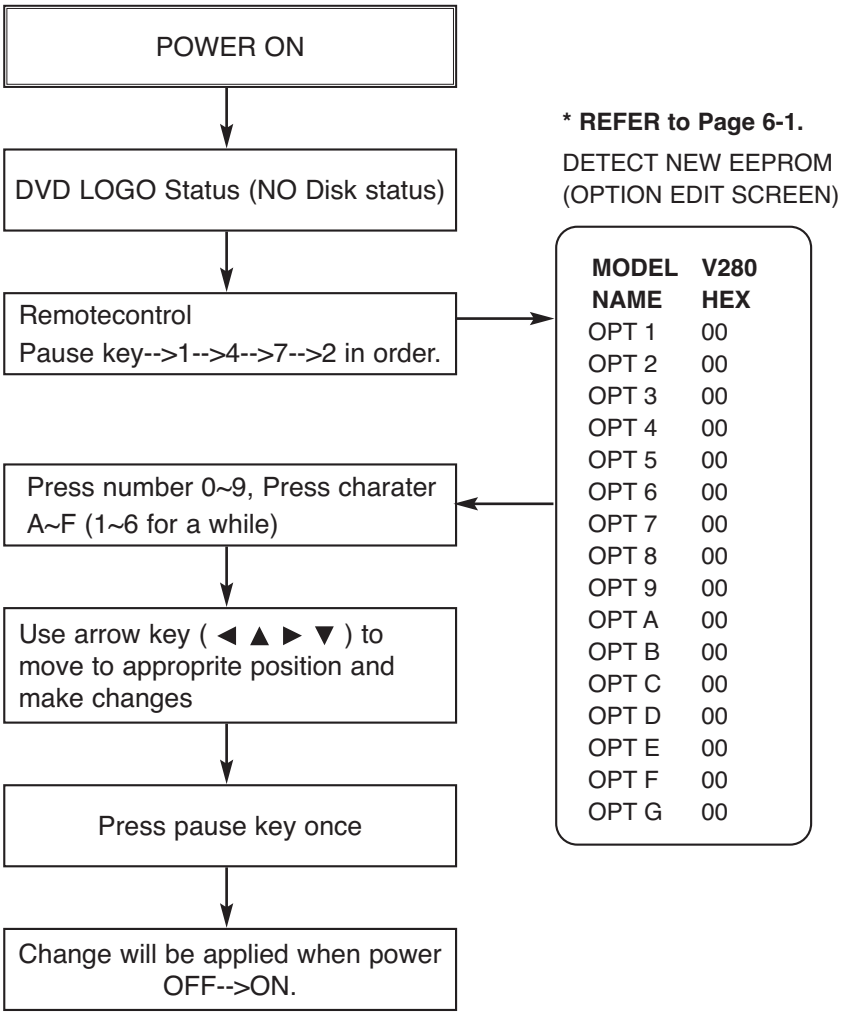

*** OPTION**

- NTSC model doesn't have VCR option and use DVD option B~F as VCR option. (only DVD exist)
- PAL model has another separate VCR option. (Both VCR and DVD exist)

SPECIFICATIONS

• GENERAL

Power requirements	AC 200-240V, 50/60 Hz
Power consumption	17W
Dimensions (approx.)	430 x 78.5 x 265 mm (W x H x D)
Mass (approx.)	4.2 kg
Operating temperature	5˚C to 35˚C (41˚F to 95˚F)
Operating humidity	5 % to 90 %
Timer	24 hours display type
RF Modulator	UHF 22 - 68 (Adjustable)

• SYSTEM

Laser	Semiconductor laser, wavelength 650 nm
Video Head system	Double azimuth 6 heads, helical scanning.
Signal system	PAL
Frequency response	DVD (PCM 96 kHz): 8 Hz to 44 kHz DVD (PCM 48 kHz): 8 Hz to 22 kHz CD: 8 Hz to 20 kHz
Signal-to-noise ratio	More than 100dB (ANALOG OUT connectors only)
Harmonic distortion	Less than 0.008%
Dynamic range	More than 100 dB (DVD) More than 95 dB (CD)

• INPUTS (VCR)

Audio	-6.0dBm, more than 10 kohms (SCART) -6.0dBm, more than 47 kohms (RCA)
Video	1.0 Vp-p, 75 ohms, unbalanced (SCART/RCA)

• OUTPUTS (DVD)

VIDEO OUT	1 Vp-p 75 ohms, sync negative
COMPONENT VIDEO OUT (Progressive Scan)	(Y) 1.0 V (p-p), 75 Ω, negative sync, RCA jack x 1 (Pb)/(Pr) 0.7 V (p-p), 75 Ω, RCA jack x 2
RGB output	0.7 Vp-p, 75 ohms
Audio output (coaxial audio)	0.5 V (p-p), 75 Ω, RCA jack x 1
Audio output (analog audio)	2.0 Vrms (1 KHz, 0 dB), 600 Ω, RCA jack (L, R)x2/SCART (TO TV)

• OUTPUTS (VCR)

Audio	-6.0dBm, less than 1 kohms (SCART)
Video	1.0Vp-p, 75 ohms, unbalanced (SCART)
RGB output	0.7 Vp-p, 75 ohms

*Design and specifications are subject to change without notice.

SECTION 2

CABINET & MAIN CHASSIS

CONTENTS

EXPLODED VIEWS 2-2

1. Cabinet and Main Frame Section 2-2
2. Packing Accessory Section 2-3

EXPLODED VIEWS

1. CABINET AND MAIN FRAME SECTION

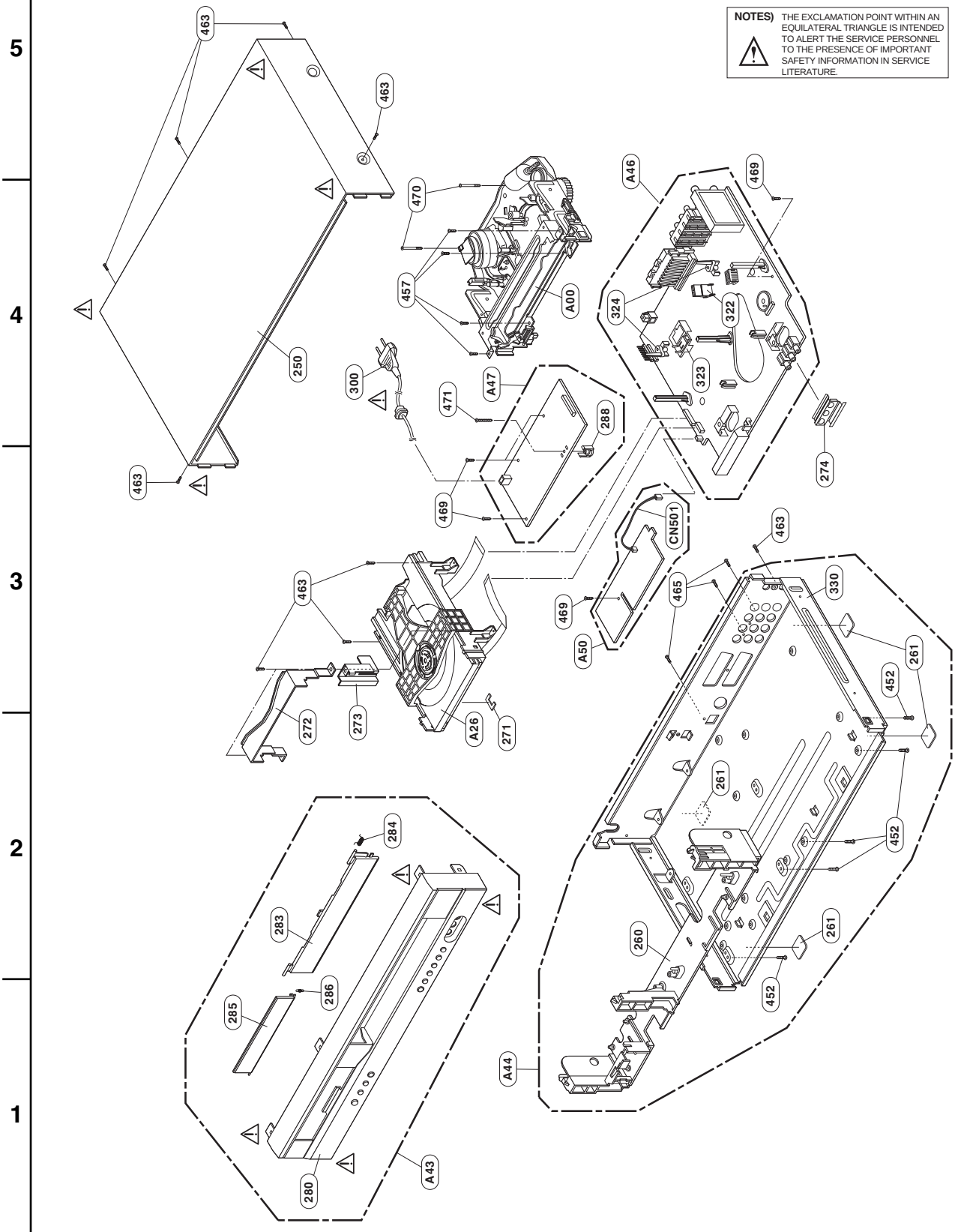

2. PACKING ACCESSORY SECTION

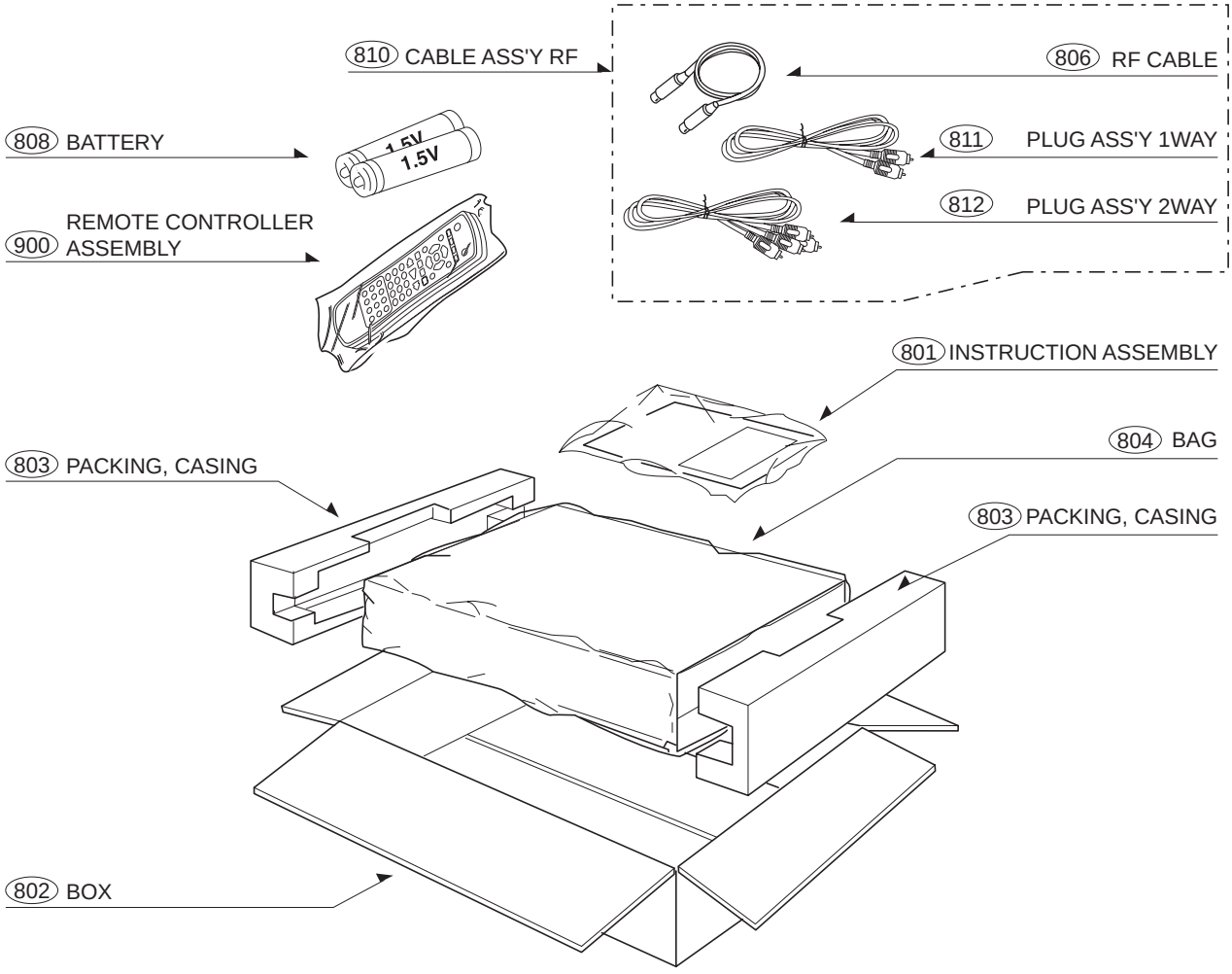

SECTION 3
ELECTRICAL

CONTENTS

VCR PART

ELECTRICAL ADJUSTMENT PROCEDURES 3-2
ELECTRICAL TROUBLESHOOTING GUIDE 3-3
1. POWER(SMPS) CIRCUIT 3-6
2. SYSTEM/KEY CIRCUIT 3-7
3. SERVO CIRCUIT 3-8
4. Y/C CIRCUIT 3-10
5. HI-FI CIRCUIT 3-14
6 TUNER/IF CIRCUIT 3-17

BLOCK DIAGRAMS 3-19
1. POWER (SMPS) BLOCK DIAGRAM 3-19
2. TU/IF, NICAM & A2 BLOCK DIAGRAM 3-21
3. VPS BLOCK DIAGRAM 3-22
4. Y/C BLOCK DIAGRAM 3-23
5. Hi-Fi BLOCK DIAGRAM 3-25
6. SYSTEM BLOCK DIAGRAM 3-27

CIRCUIT DIAGRAMS 3-29
1. POWER (SMPS) CIRCUIT DIAGRAM 3-29
2. TU/IF CIRCUIT DIAGRAM 3-31
3. A/V CIRCUIT DIAGRAM 3-33
4. Hi-Fi CIRCUIT DIAGRAM 3-35
5. SCART(JACK) CIRCUIT DIAGRAM 3-37
6. SYSTEM CIRCUIT DIAGRAM 3-39
WAVEFORMS 3-41
CIRCUIT VOLTAGE CHART 3-43

PRINTED CIRCUIT DIAGRAMS 3-49
1. MAIN P.C.BOARD (TOP SIDE) 3-49
2. MAIN P.C.BOARD (BOTTOM SIDE) 3-51
3. POWER P.C.BOARD 3-53
4. KEY P.C.BOARD 3-53

DVD PART

ELECTRICAL TROUBLESHOOTING GUIDE 3-55
1. POWER OPERATION FLOW 3-55
2. SYSTEM TEST FLOW 3-56
3. TEST & DEBUG FLOW 3-57

DETAILS AND WAVEFORMS ON SYSTEM TEST AND DEBUGGING 3-63
1. SYSTEM 27MHZ CLOCK, RESET, FLASH R/W SIGNAL 3-63
2. SDRAM CLOCK 3-64
3. TRAY OPEN/CLOSE SIGNAL 3-64
4. SLED CONTROL RELATED SIGNAL (NO DISC CONDITION) 3-66
5. LENS CONTROL RELATED SIGNAL (NO DISC CONDITION) 3-66
6. LASER POWER CONTROL RELATED SIGNAL(NO DISC CONDITION) 3-67
7. DISC TYPE JUDGEMENT WAVEFORM 3-67
8. FOCUS ON WAVEFORM 3-69
9. SPINDLE CONTROL WAVEFORM (NO DISC CONDITION) 3-70
10. TRACKING CONTROL RELATED SIGNAL(SYSTEM CHECKING) 3-71
11. ZR36882 AUDIO OPTICAL AND COAXIAL OUTPUT(SPDIF) 3-72
12. ZR36882 VIDEO OUTPUT WAVEFORM 3-72
13. ZR36882 AUDIO OUTPUT TO AUDIO DAC 3-73
14. AUDIO OUTPUT FROM AUDIO DAC 3-74

BLOCK DIAGRAMS 3-76
1. SYSTEM BLOCK DIAGRAM 3-76
2. SERVO BLOCK DIAGRAM 3-77
3. AUDIO & VIDEO IN/OUT BLOCK DIAGRAM 3-78

CIRCUIT DIAGRAMS 3-79
1. SYSTEM CIRCUIT DIAGRAM 3-79
2. SERVO CIRCUIT DIAGRAM 3-81
3. AV/JACK CIRCUIT DIAGRAM 3-83

VCR PART
ELECTRICAL ADJUSTMENT PROCEDURES

1. Servo Adjustment

1) PG Adjustment

• Test Equipment

a) OSCILLOSCOPE	C) PAL MODEL : PAL SP TEST TAPE
b) NTSC MODEL : NTSC SP TEST TAPE	

• Adjustment And Specification

MODE	MEASUREMENT POINT	ADJUSTMENT POINT	SPECIFICATION
PLAY	V.Out H/SW(TP)	R/C TRK JIG KEY	6.5 ± 0.5H

• **Adjustment Procedure**

a) Insert the SP Test Tape and play.
Note - Adjust the distance of X, pressing the Tracking(+) or Tracking(-) when the “ATR” is blink after the SP Test Tape is inserted.

b) Connect the CH1 of the oscilloscope to the H/SW(TP) and CH2 to the Video Out for the VCR.

c) Trigger the mixed Combo Video Signal of CH2 to the CH1 H/SW(TP), and then check the distance (time difference), which is from the selected A(B) Head point of the H/SW(TP) signal to the starting point of the vertical synchronized signal, to 6.5H ± 0.5H (412μs, 1H=63μs).

• **PG Adjustment Method**

a-1) Payback the SP standard tape

b-2) Press the “OK” key on the Remote controller and the “PLAY” key on the Front Panel the same time for more than 5seconds, then it goes in to Tracking initial mode.

c-3) Repeat the above step(No.b-2), then it finishes the PG adjusting automatically.

d-4) Stop the playback, then it goes out to PG adjusting mode after mony the PG data.

• **CONNECTION**

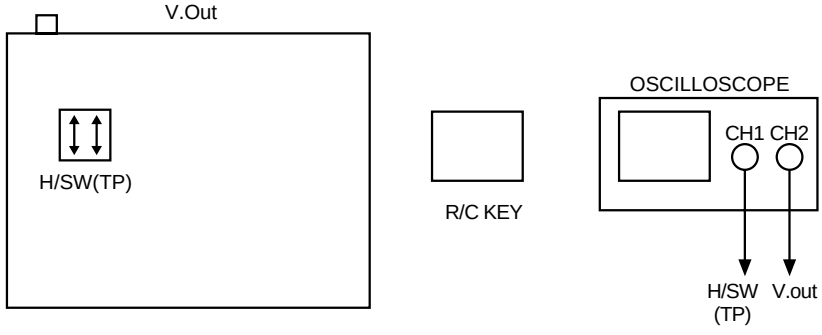

• **WAVEFORM**

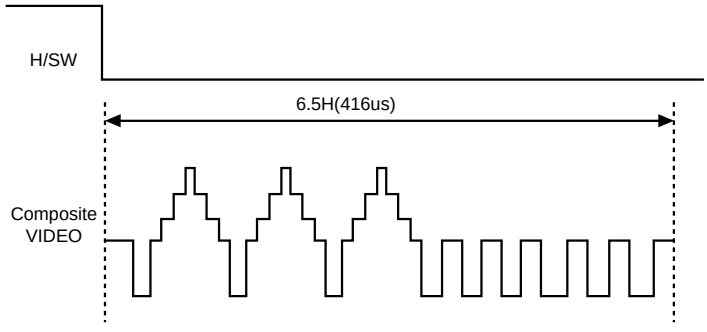

ELECTRICAL TROUBLESHOOTING GUIDE

1. Power(SMPS) CIRCUIT

(1) No 5.3VA

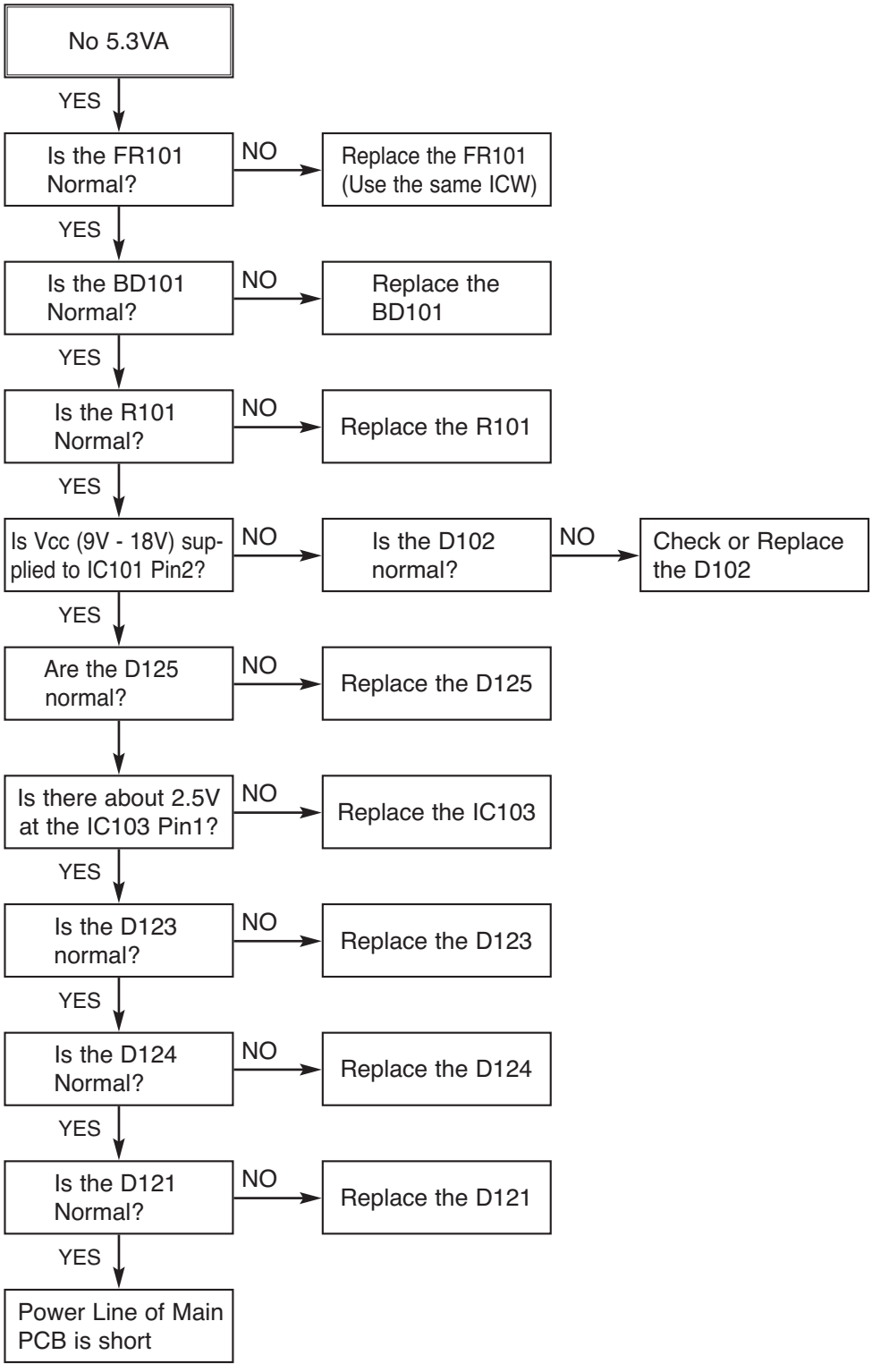

(2) No 5.0V_D

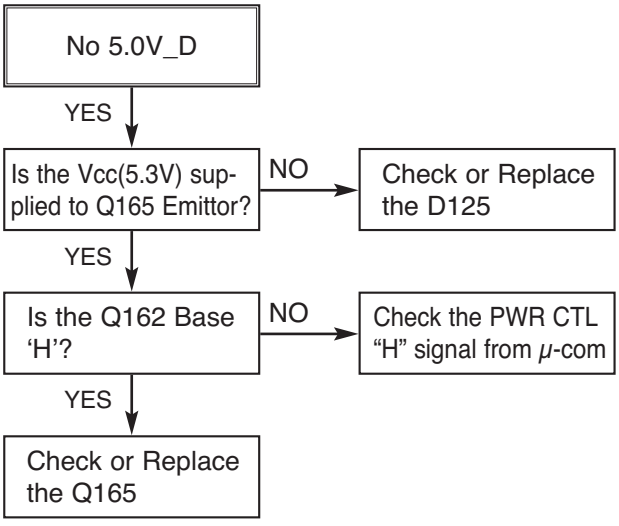

(3) No 5.0V_T

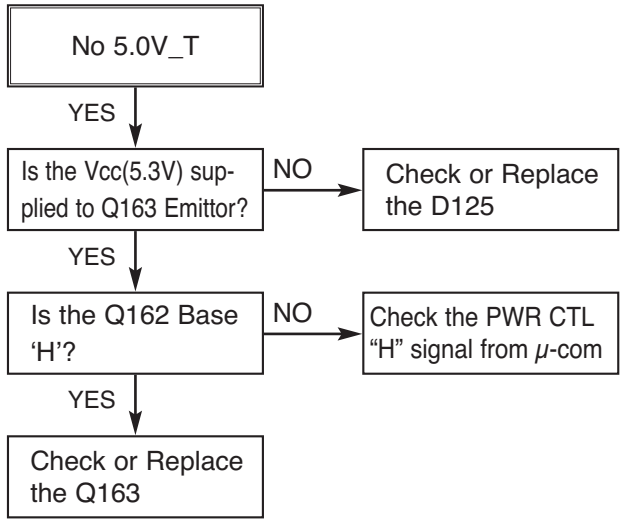

(4) No 3.8V

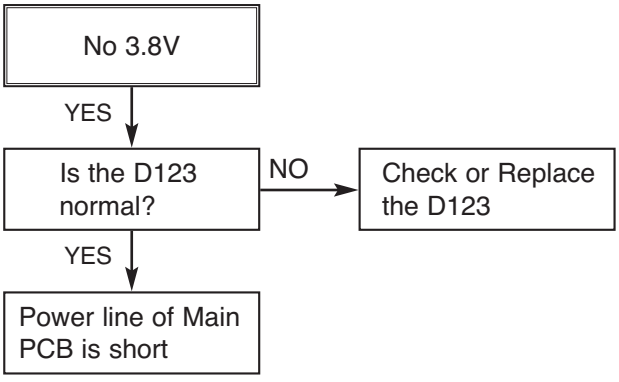

(5) No 33V

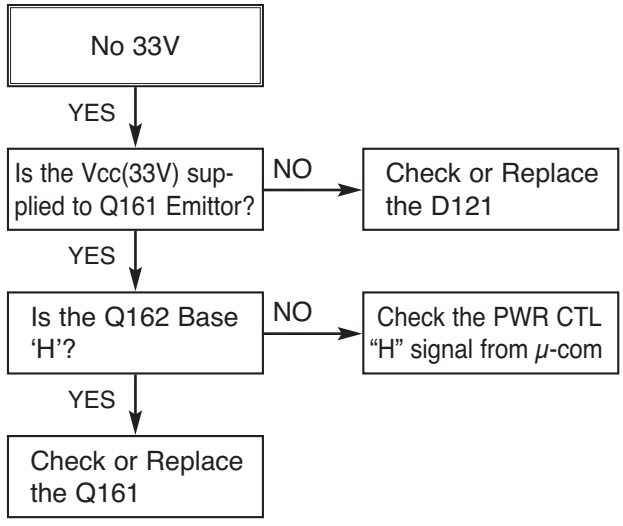

(6) No Motor_Vcc (To Cap, Drum Motor)

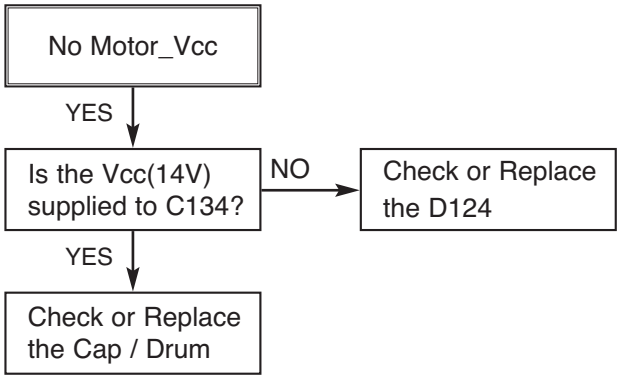

(7) No REG 12V

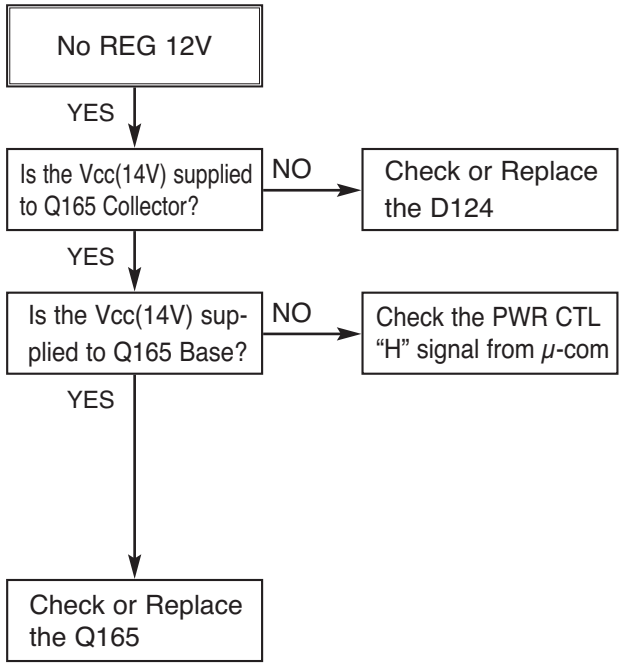

2. SYSTEM/KEY CIRCUIT

(1) AUTO STOP

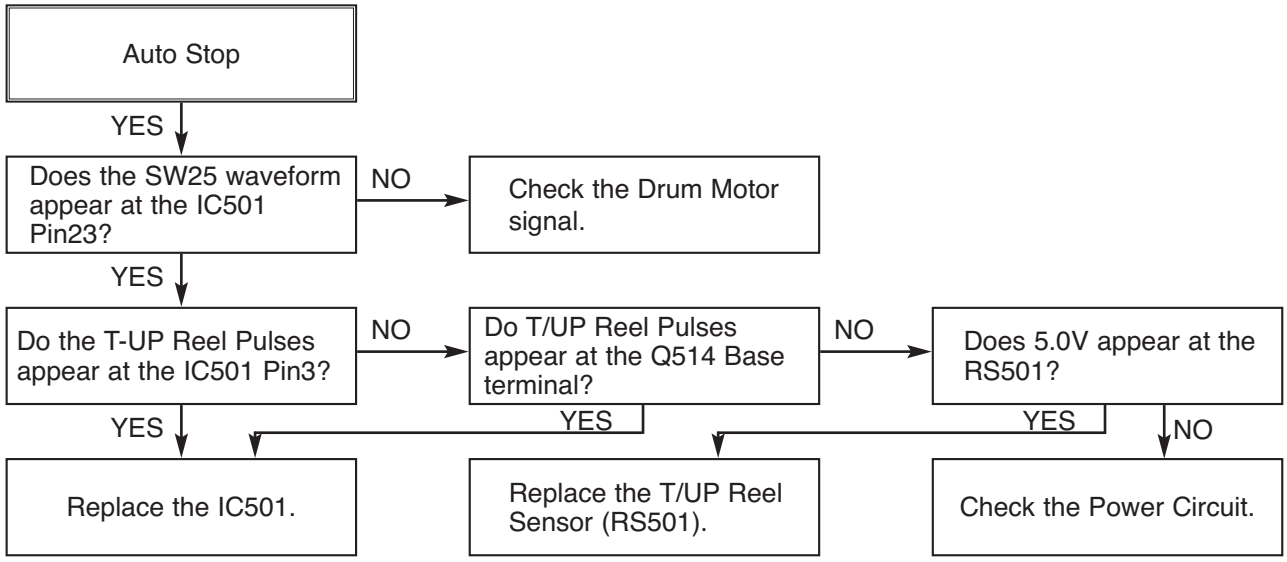

(2) The unstable loading of a Cassette tape

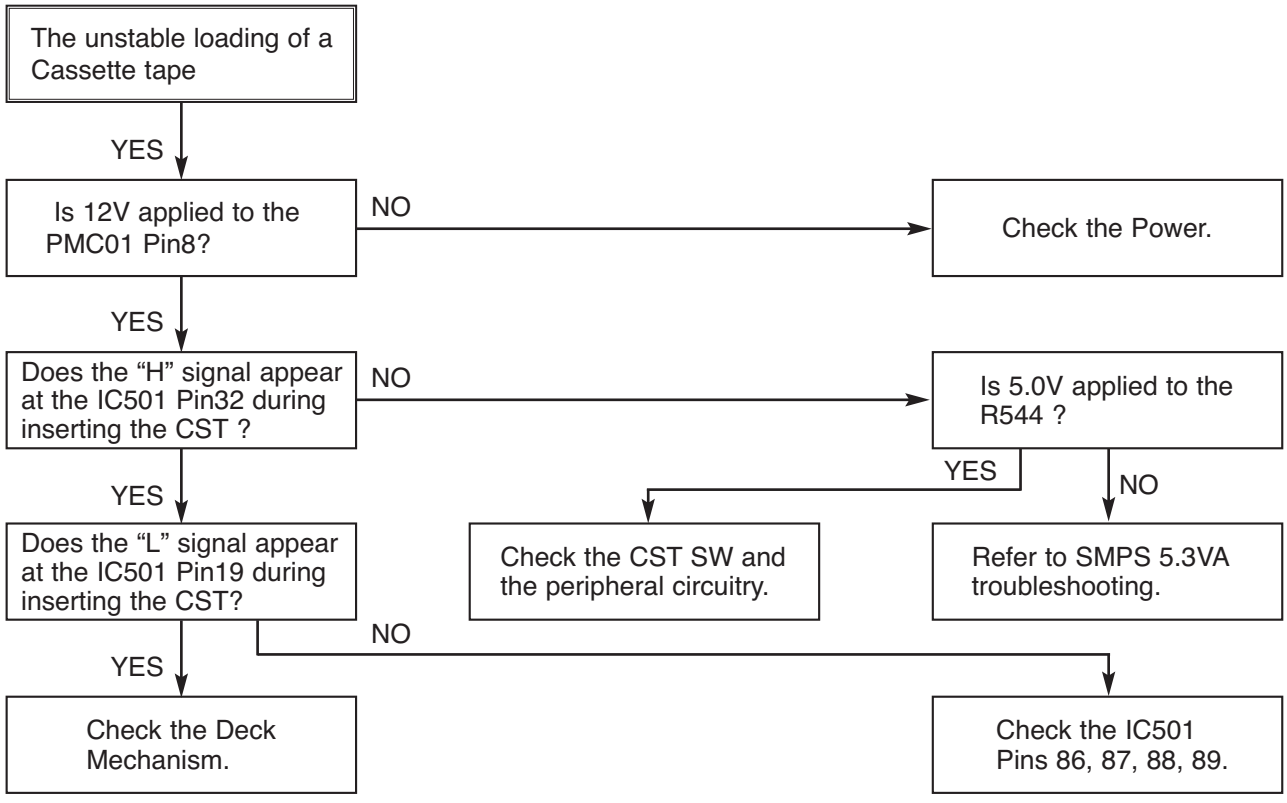

Caution : Auto stop can occur because Grease or Oil is dried up

3. SERVO CIRCUIT

(1) Unstable Video in PB MODE

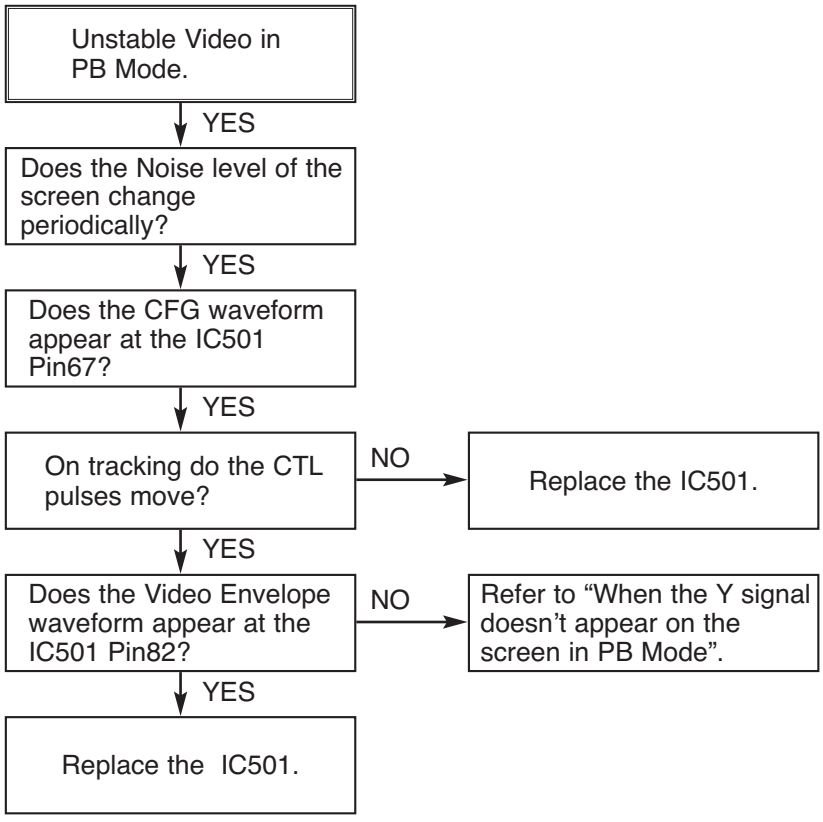

(2) When the Drum Motor doesn't run.

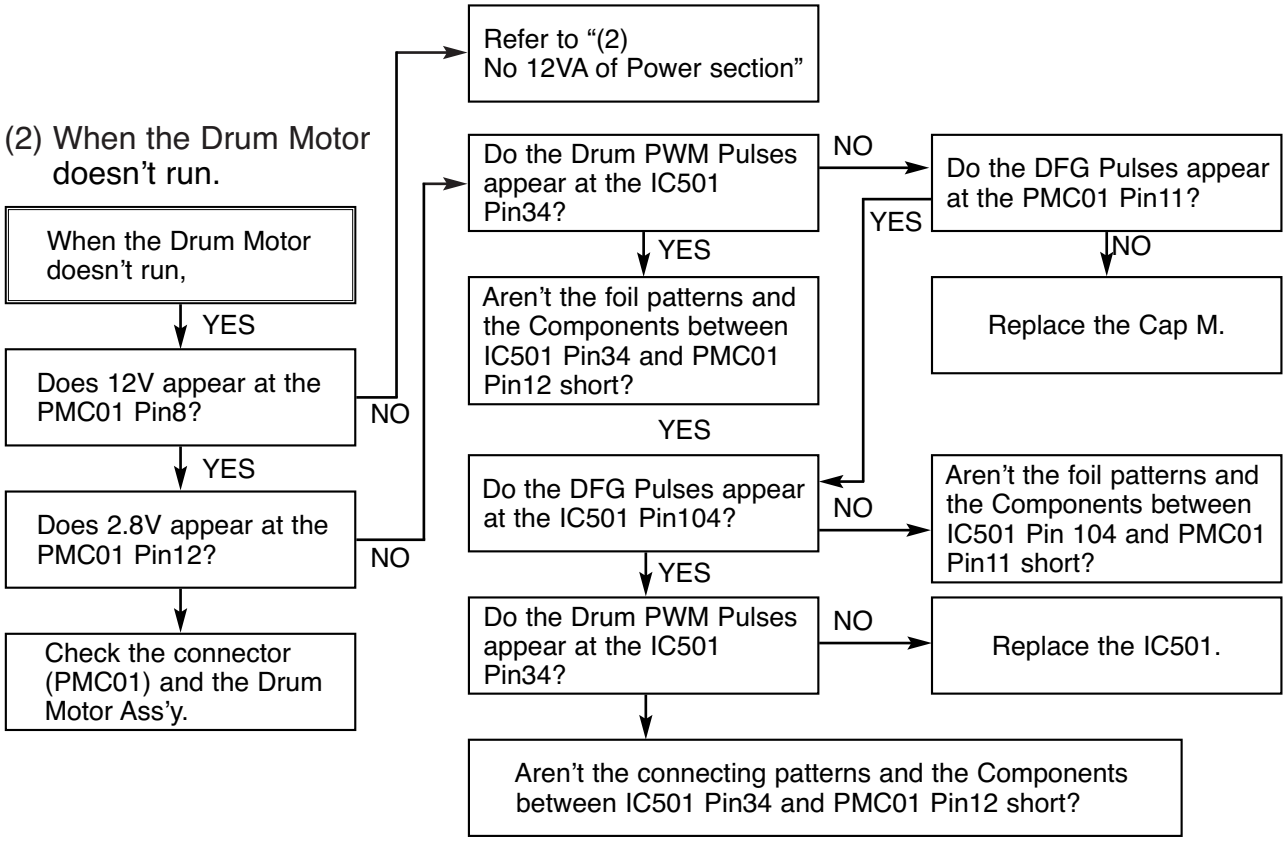

(3) When the Capstan Motor doesn't run,

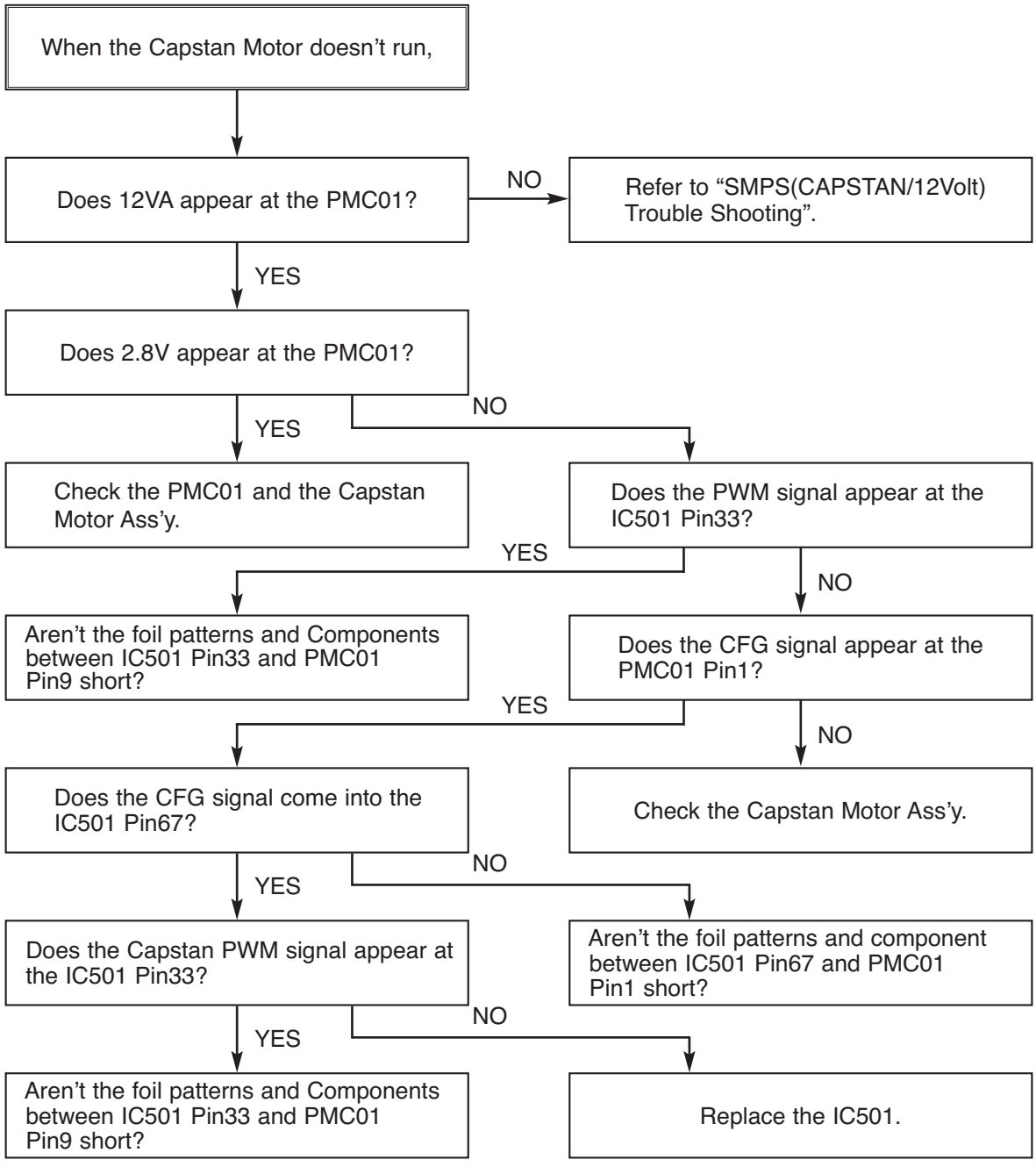

(4) KEY doesn't working

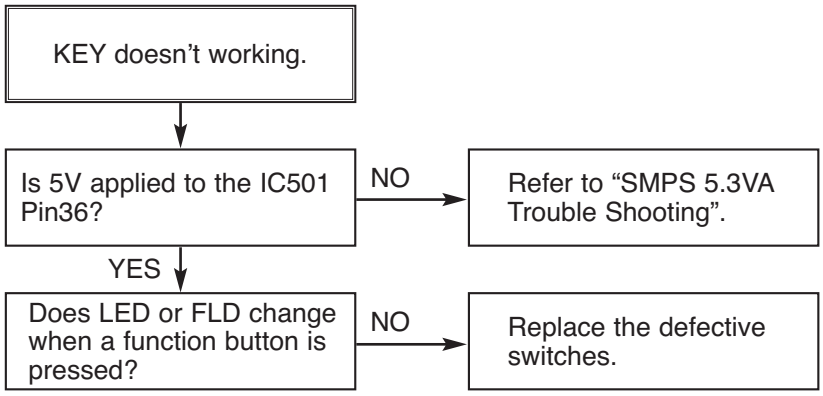

4. Y/C CIRCUIT

(1) No Video in EE Mode,

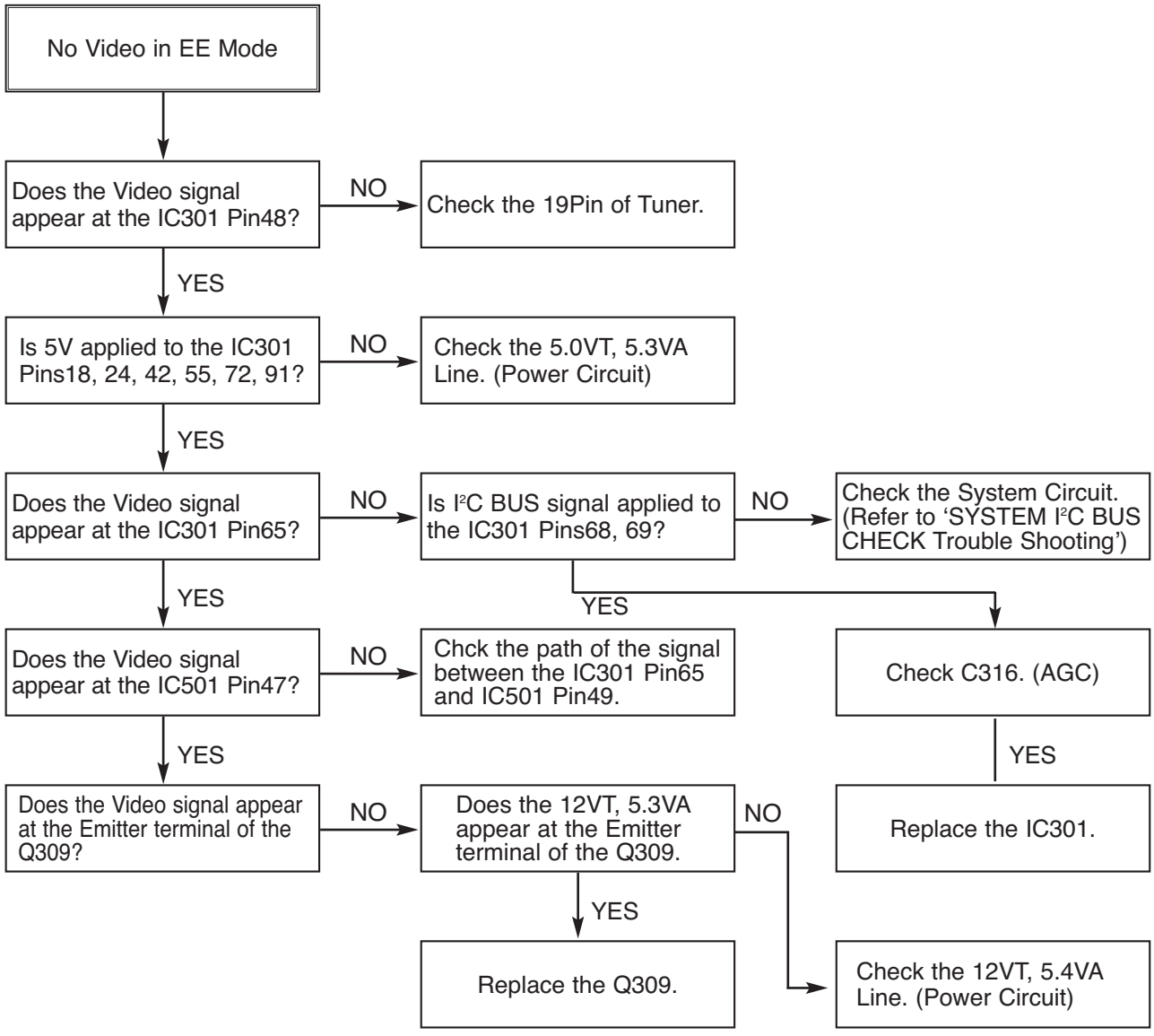

(2) When the Y(Luminance) signal doesn't appear on the screen in PB Mode,

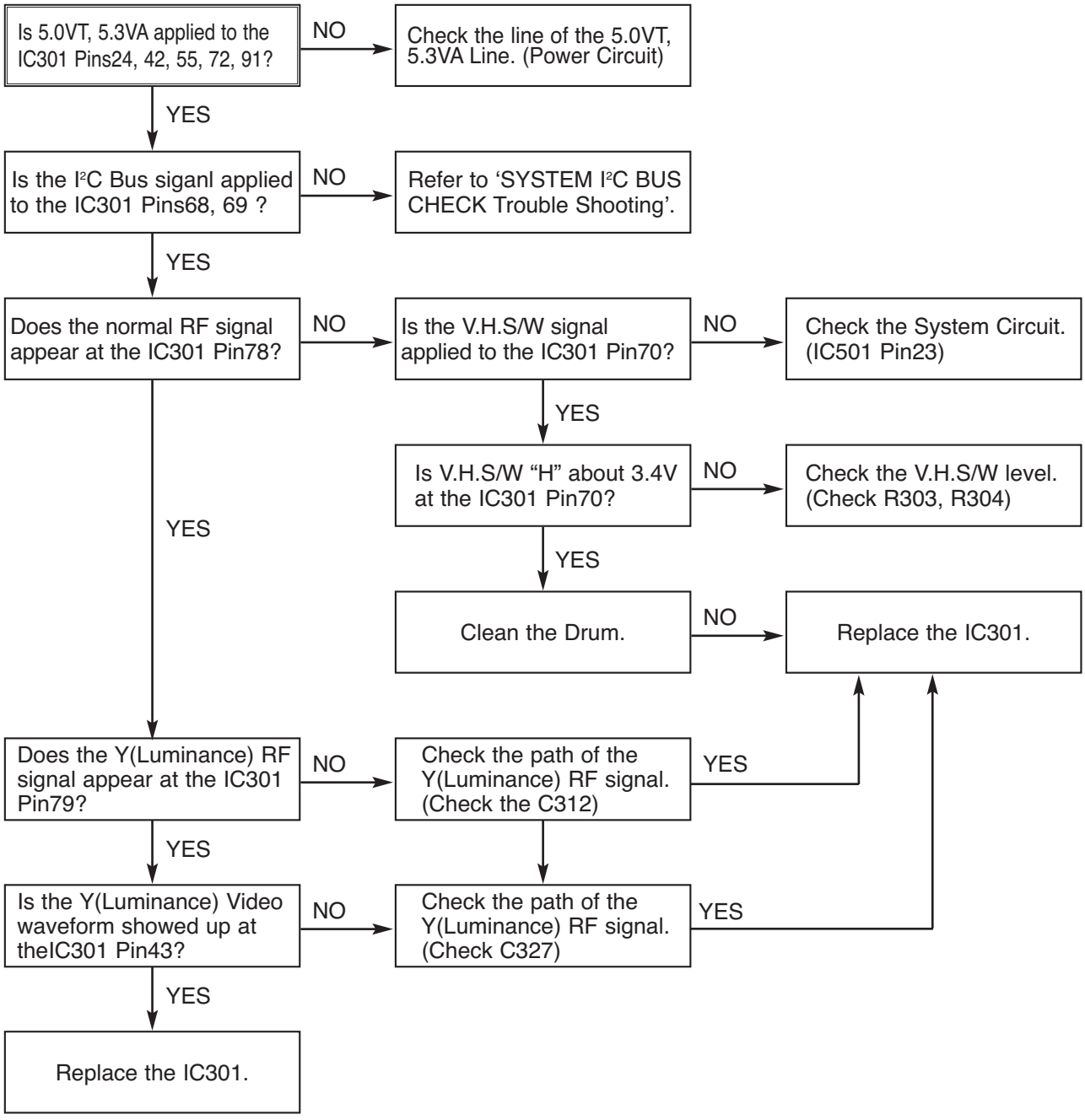

(3) When the C(Color) signal doesn't appear on the screen in PB Mode,

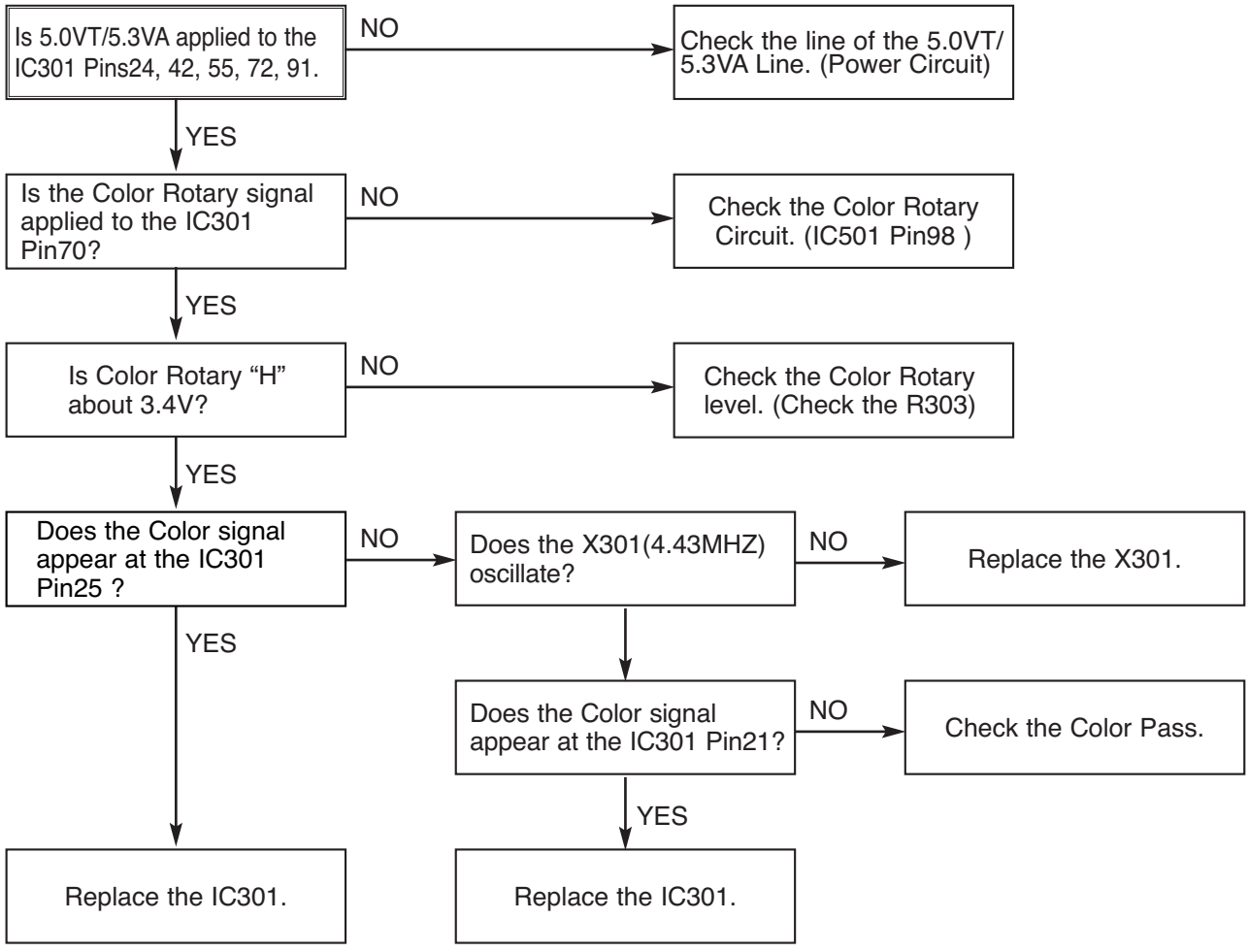

(4) When the Video signal doesn't appear on the screen in REC Mode,

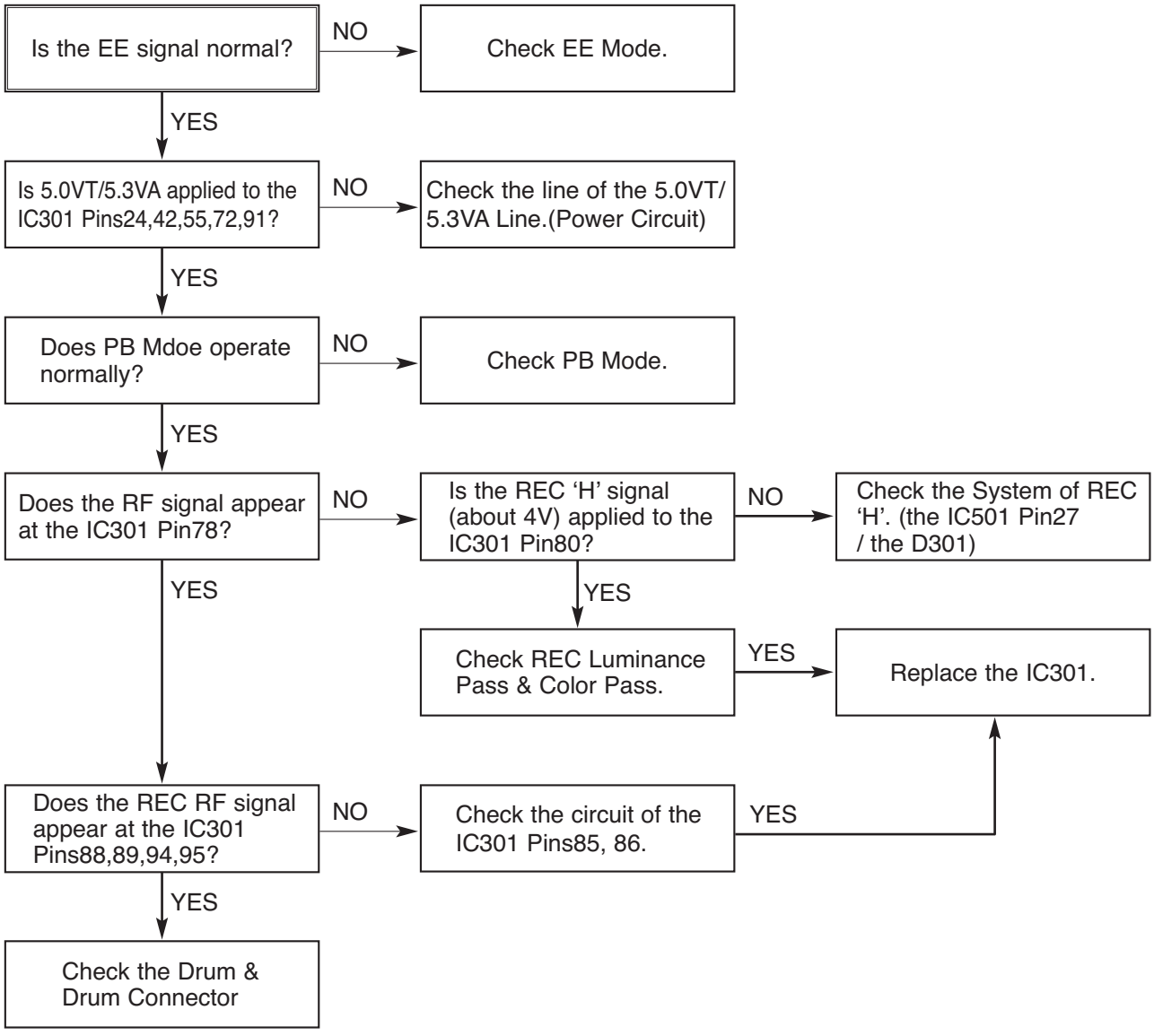

5. Hi-Fi CIRCUIT

(A) No Sound(EE Mode)

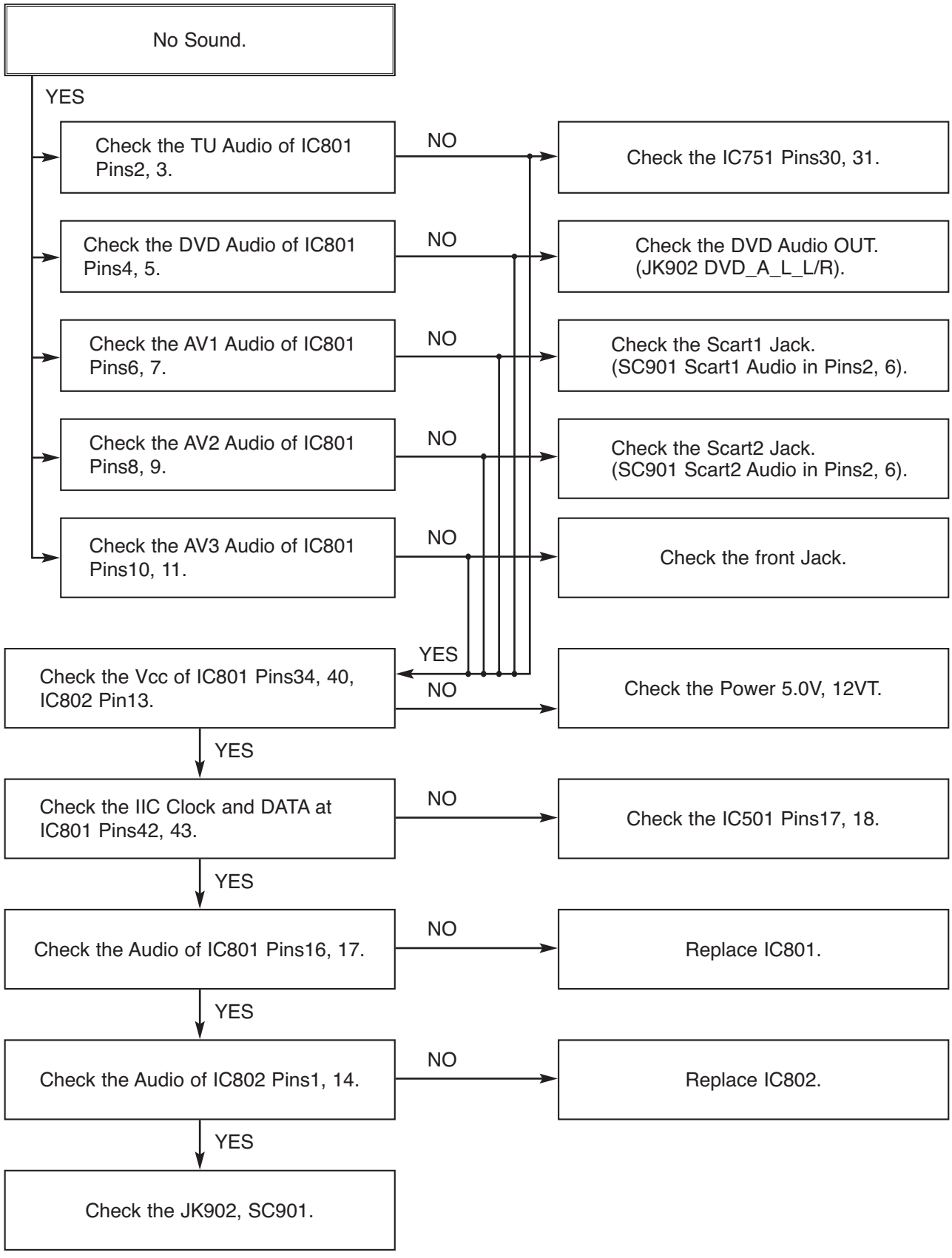

(B) Hi-Fi Playback

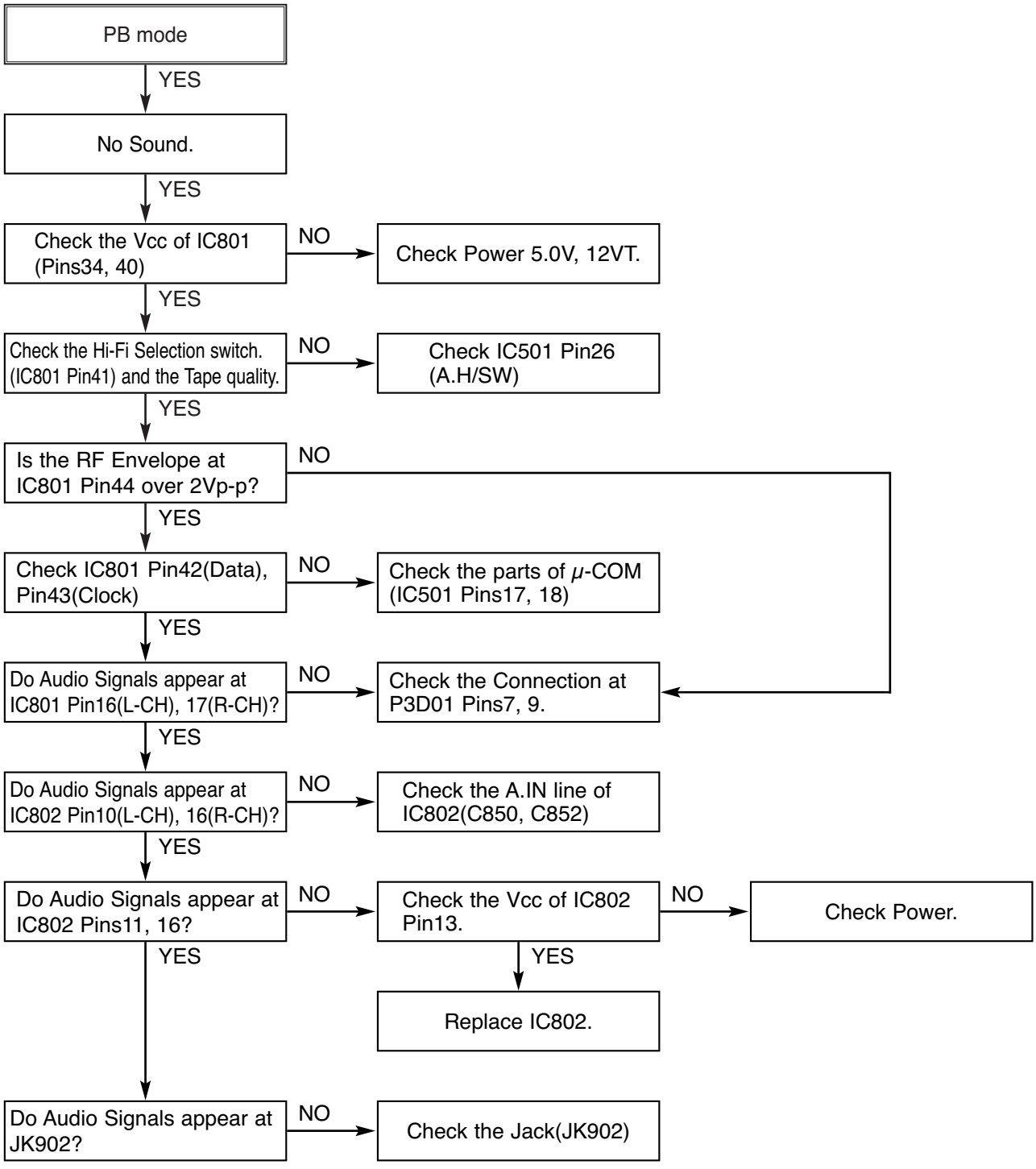

(C)

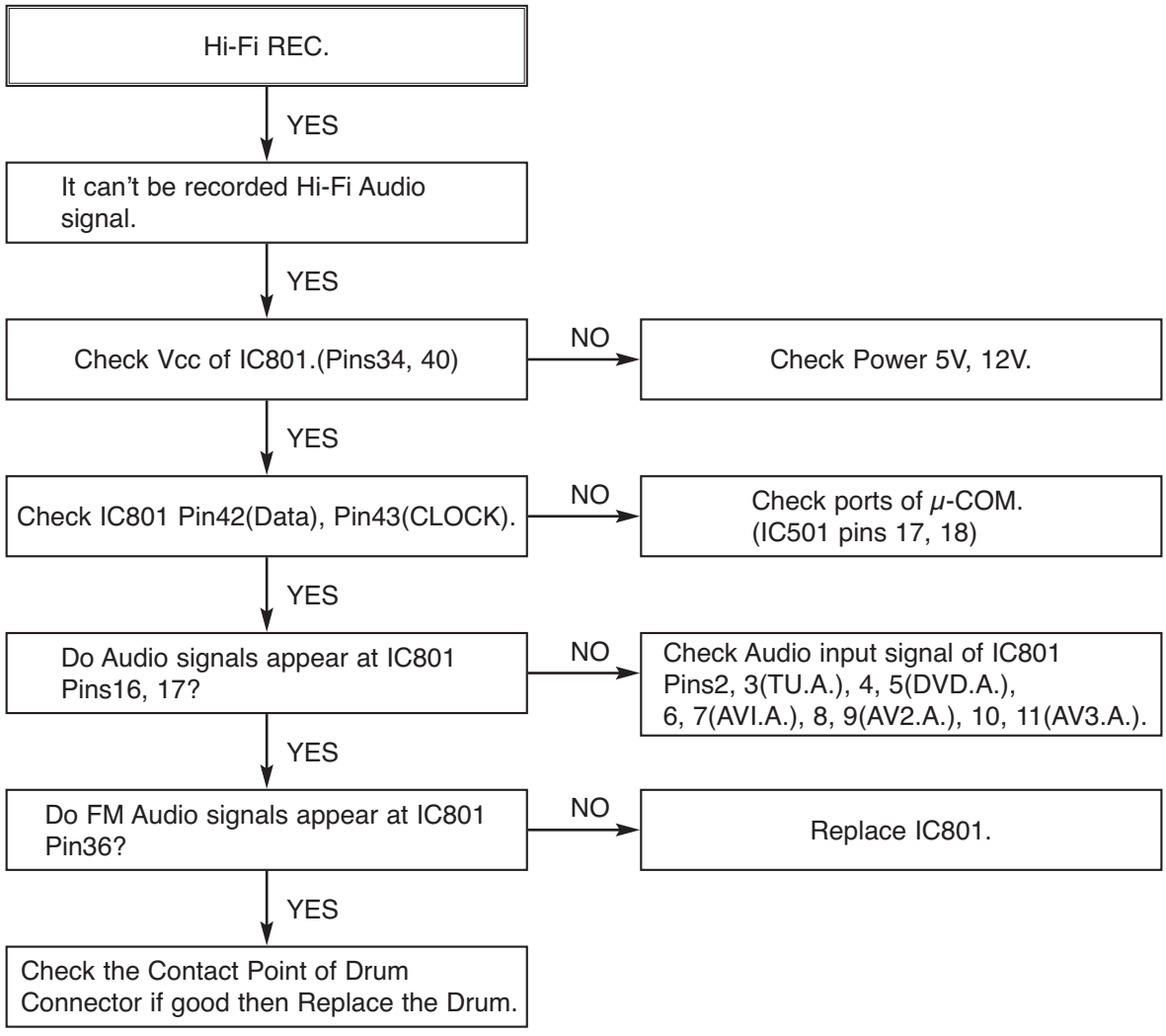
Hi-Fi REC.
YES
It can't be recorded Hi-Fi Audio signal.
YES
Check Vcc of IC801.(Pins34, 40)
NO
Check Power 5V, 12V.
YES
Check IC801 Pin42(Data), Pin43(CLOCK).
NO
Check ports of μ-COM. (IC501 pins 17, 18)
YES
Do Audio signals appear at IC801 Pins16, 17?
NO
Check Audio input signal of IC801 Pins2, 3(TU.A.), 4, 5(DVD.A.), 6, 7(AVI.A.), 8, 9(AV2.A.), 10, 11(AV3.A.).
YES
Do FM Audio signals appear at IC801 Pin36?
NO
Replace IC801.
YES
Check the Contact Point of Drum Connector if good then Replace the Drum.

6. Tuner/IF CIRCUIT

(A) No Picture on the TV screen

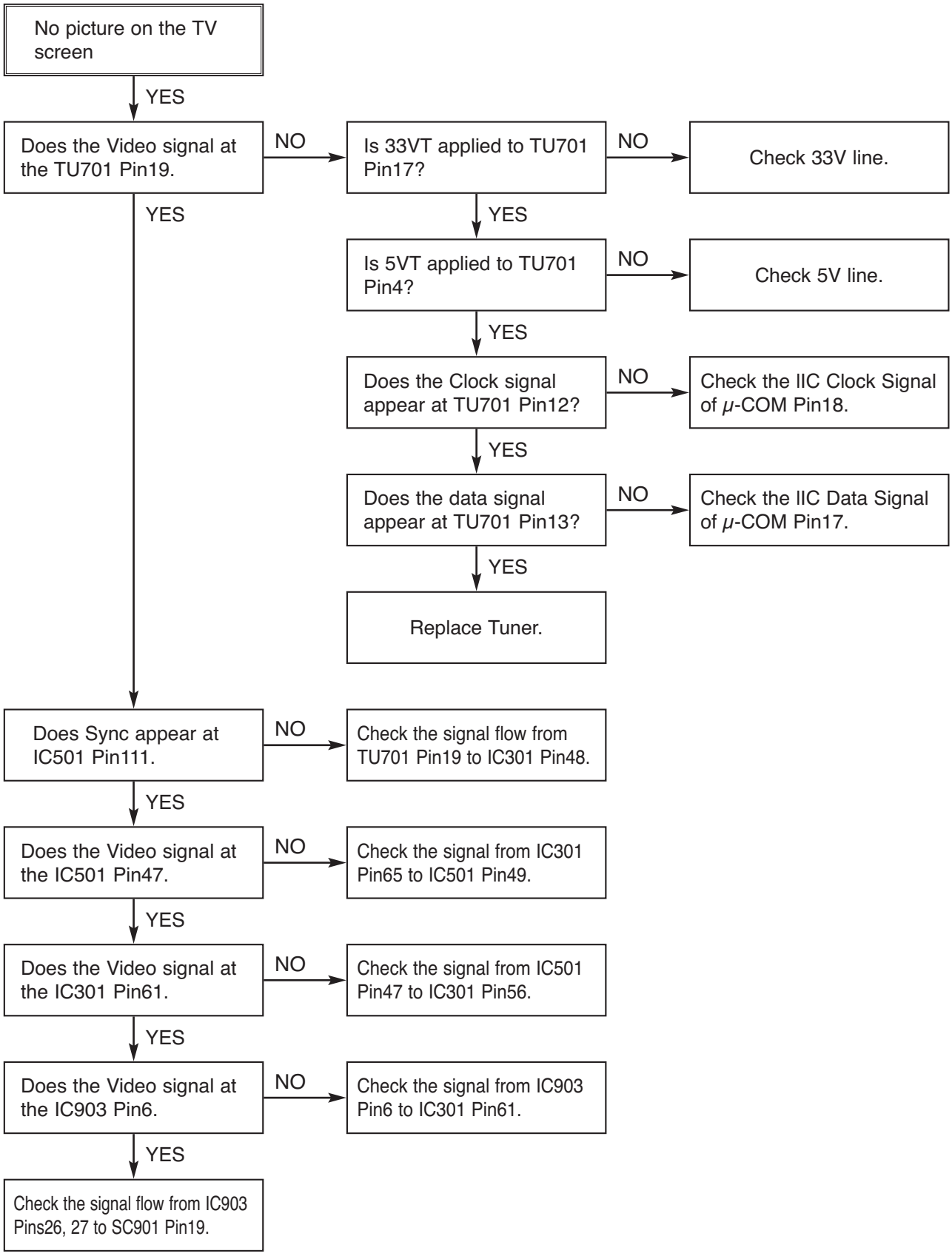

(B) No Sound

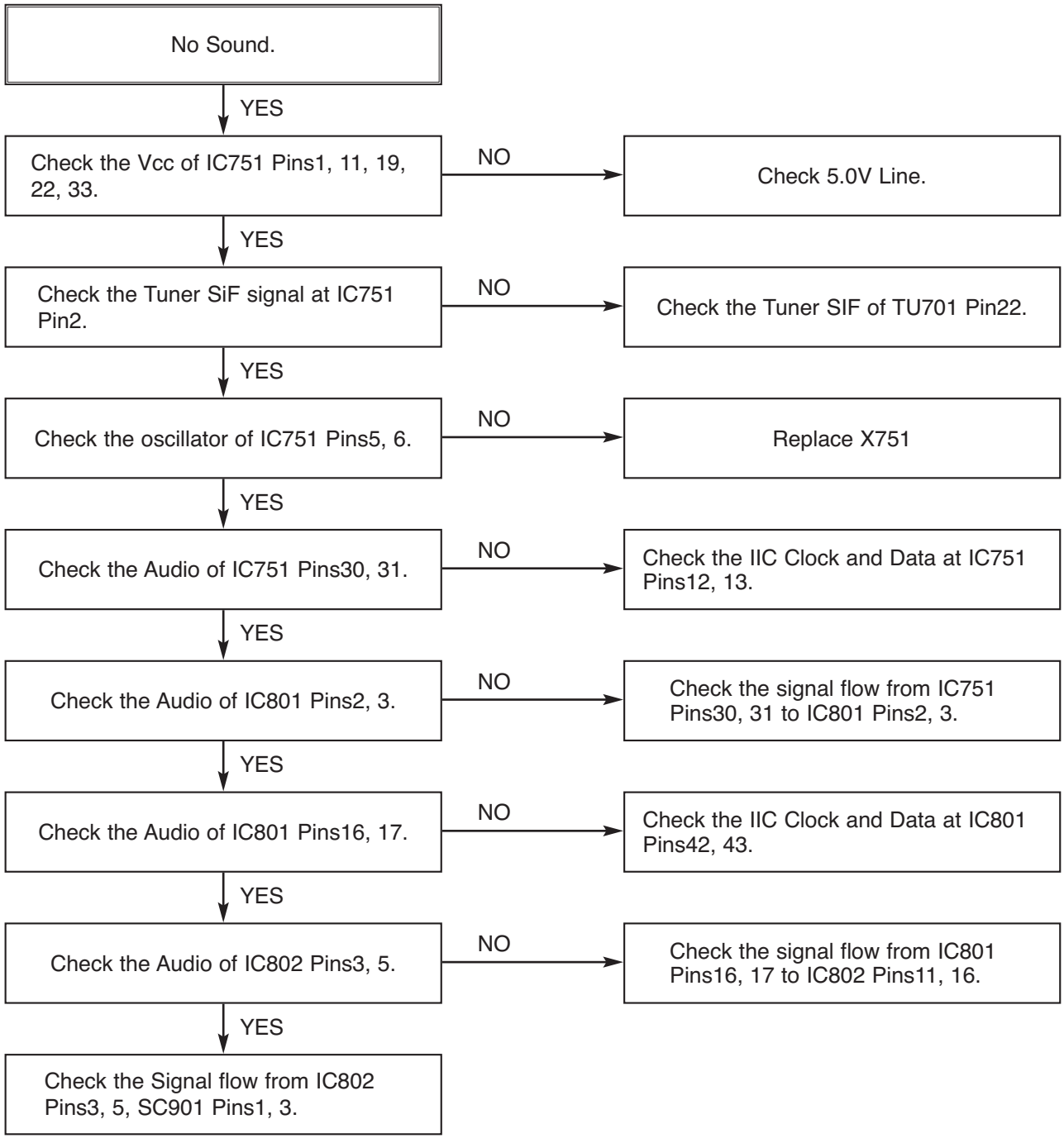
No Sound.
YES
Check the Vcc of IC751 Pins1, 11, 19, 22, 33.
NO
Check 5.0V Line.
YES
Check the Tuner SiF signal at IC751 Pin2.
NO
Check the Tuner SIF of TU701 Pin22.
YES
Check the oscillator of IC751 Pins5, 6.
NO
Replace X751
YES
Check the Audio of IC751 Pins30, 31.
NO
Check the IIC Clock and Data at IC751 Pins12, 13.
YES
Check the Audio of IC801 Pins2, 3.
NO
Check the signal flow from IC751 Pins30, 31 to IC801 Pins2, 3.
YES
Check the Audio of IC801 Pins16, 17.
NO
Check the IIC Clock and Data at IC801 Pins42, 43.
YES
Check the Audio of IC802 Pins3, 5.
NO
Check the signal flow from IC801 Pins16, 17 to IC802 Pins11, 16.
YES
Check the Signal flow from IC802 Pins3, 5, SC901 Pins1, 3.

BLOCK DIAGRAMS

1. POWER(SMPS) BLOCK DIAGRAM

NOTES) ⚠ Warning
Parts that are shaded are critical
With respect to risk of fire or
electricial shock.

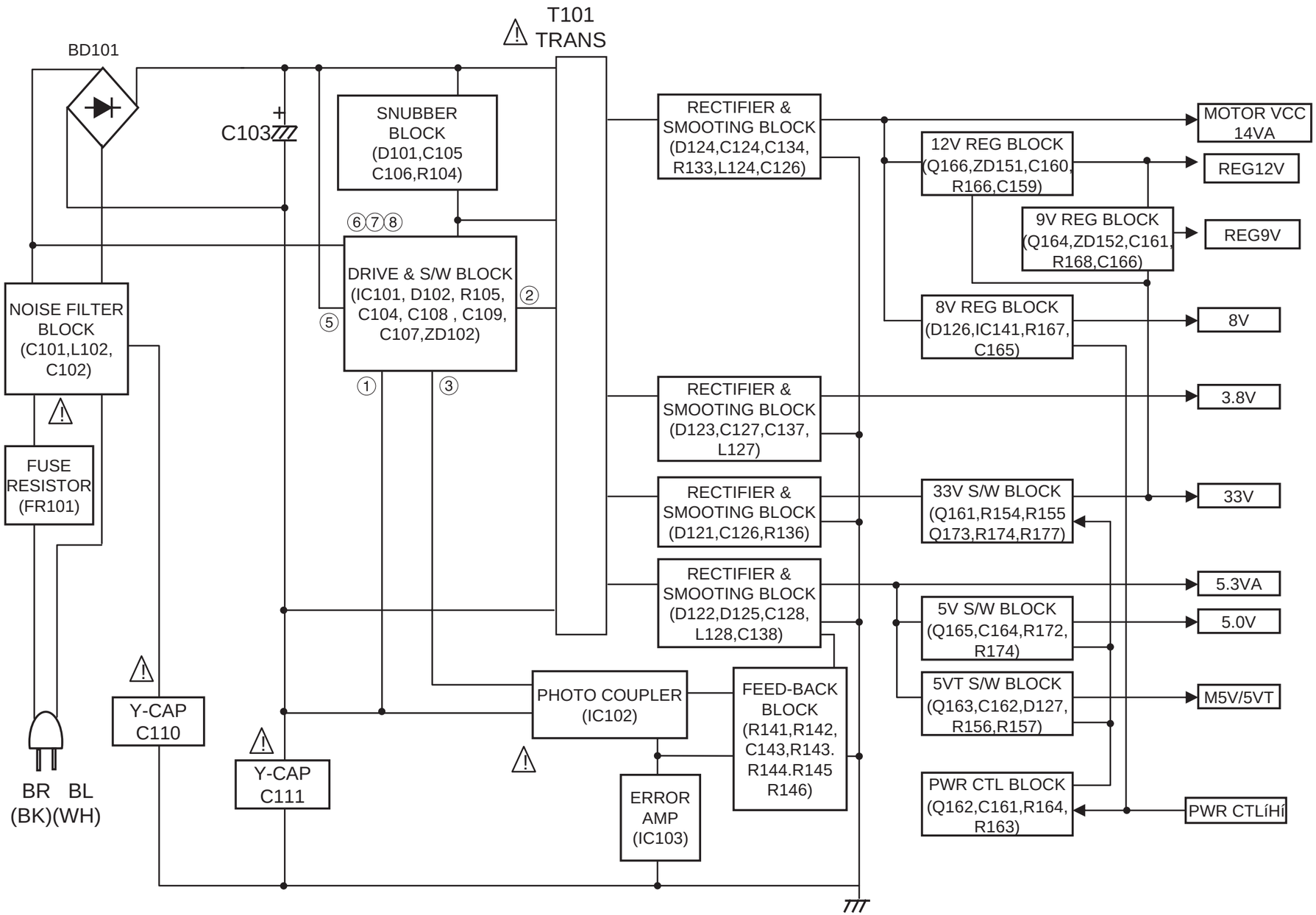

2. Tu/IF, NICAM & A2 BLOCK DIAGRAM

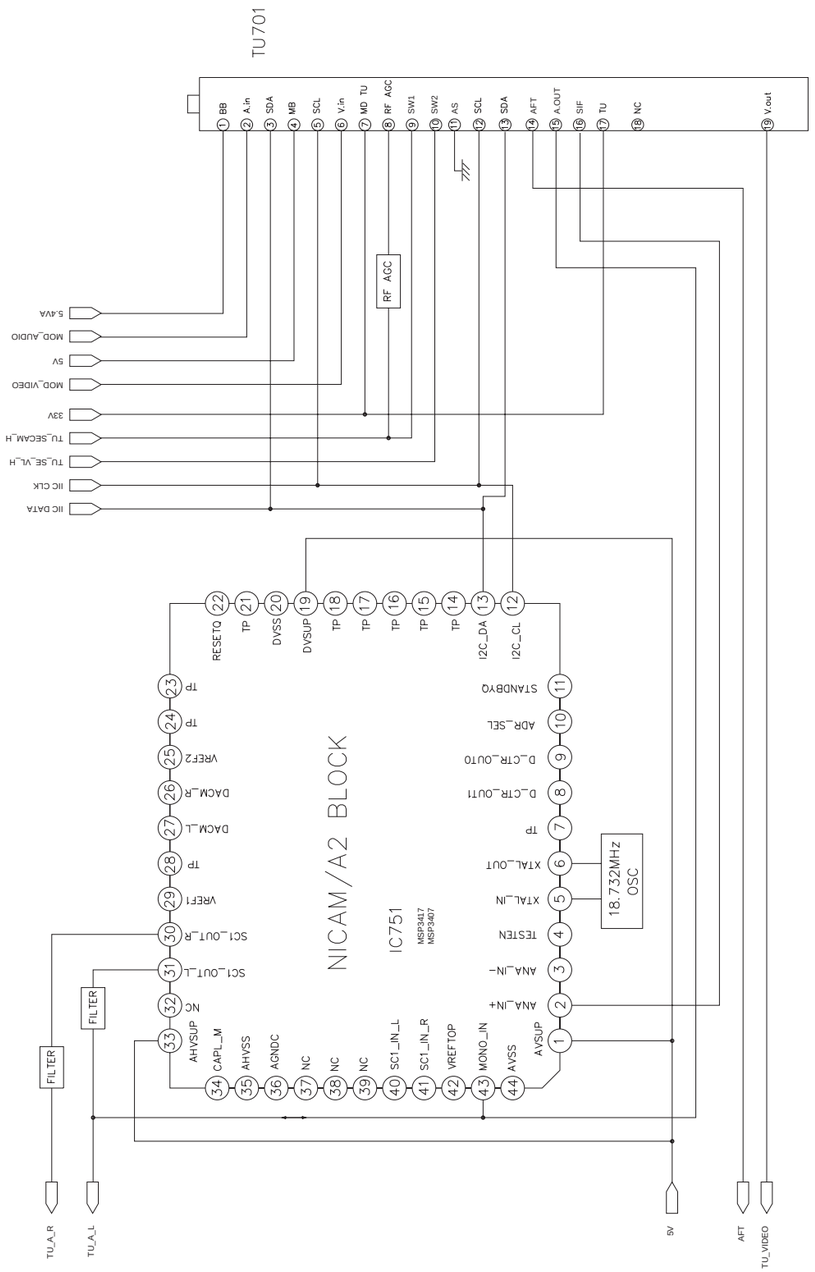

3. VPS BLOCK DIAGRAM

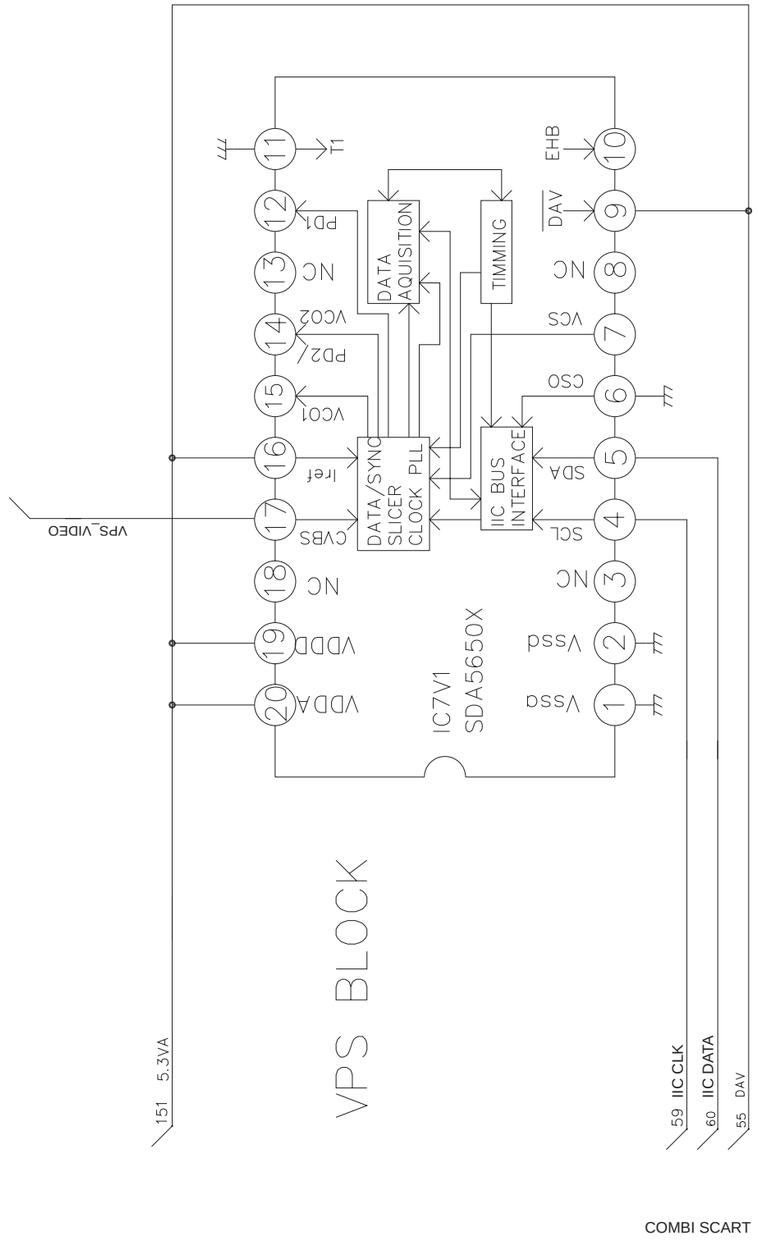

4. Y/C BLOCK DIAGRAM

(PB Mode)

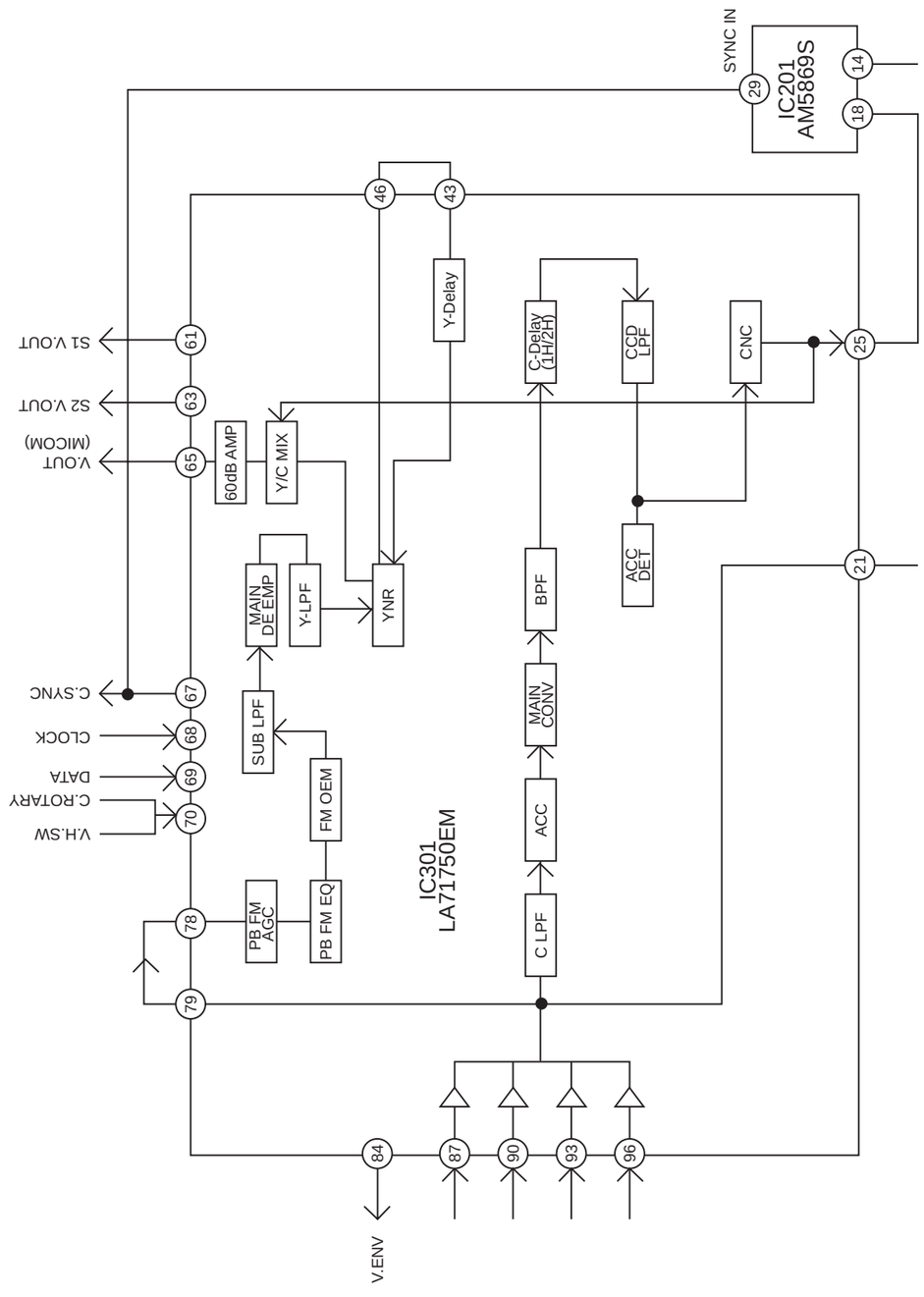

(REC Mode)

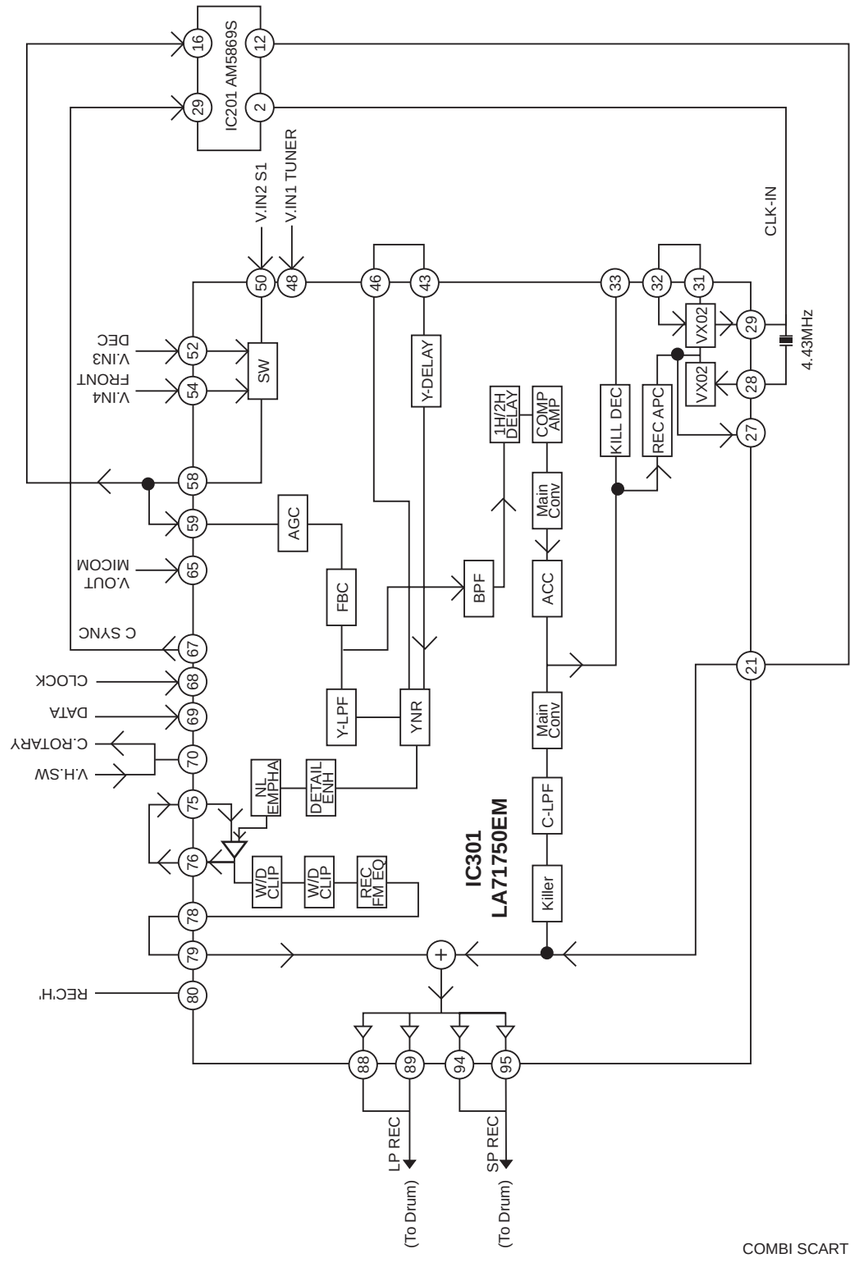

5. Hi-Fi BLOCK DIAGRAM

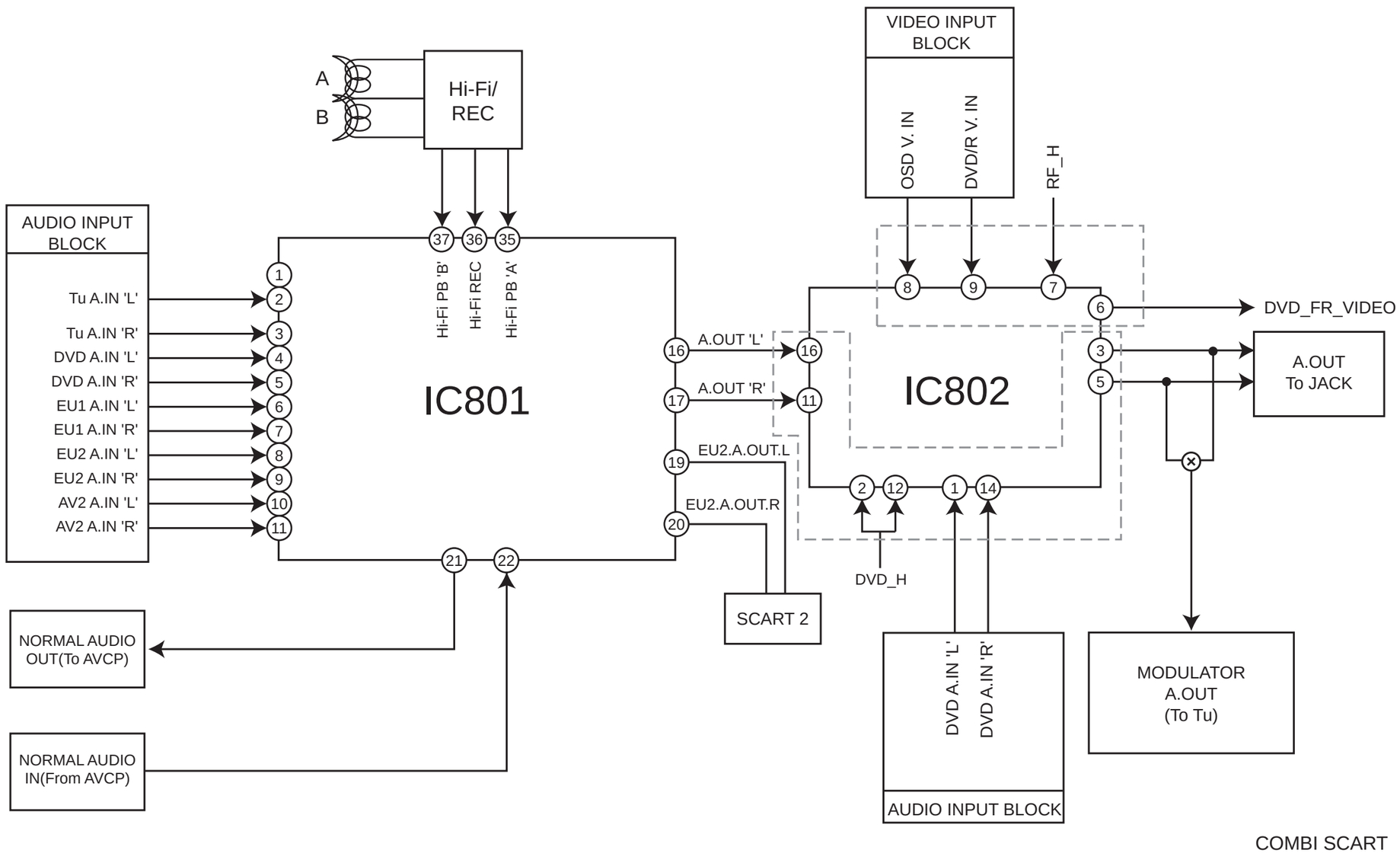

6. SYSTEM BLOCK DIAGRAM

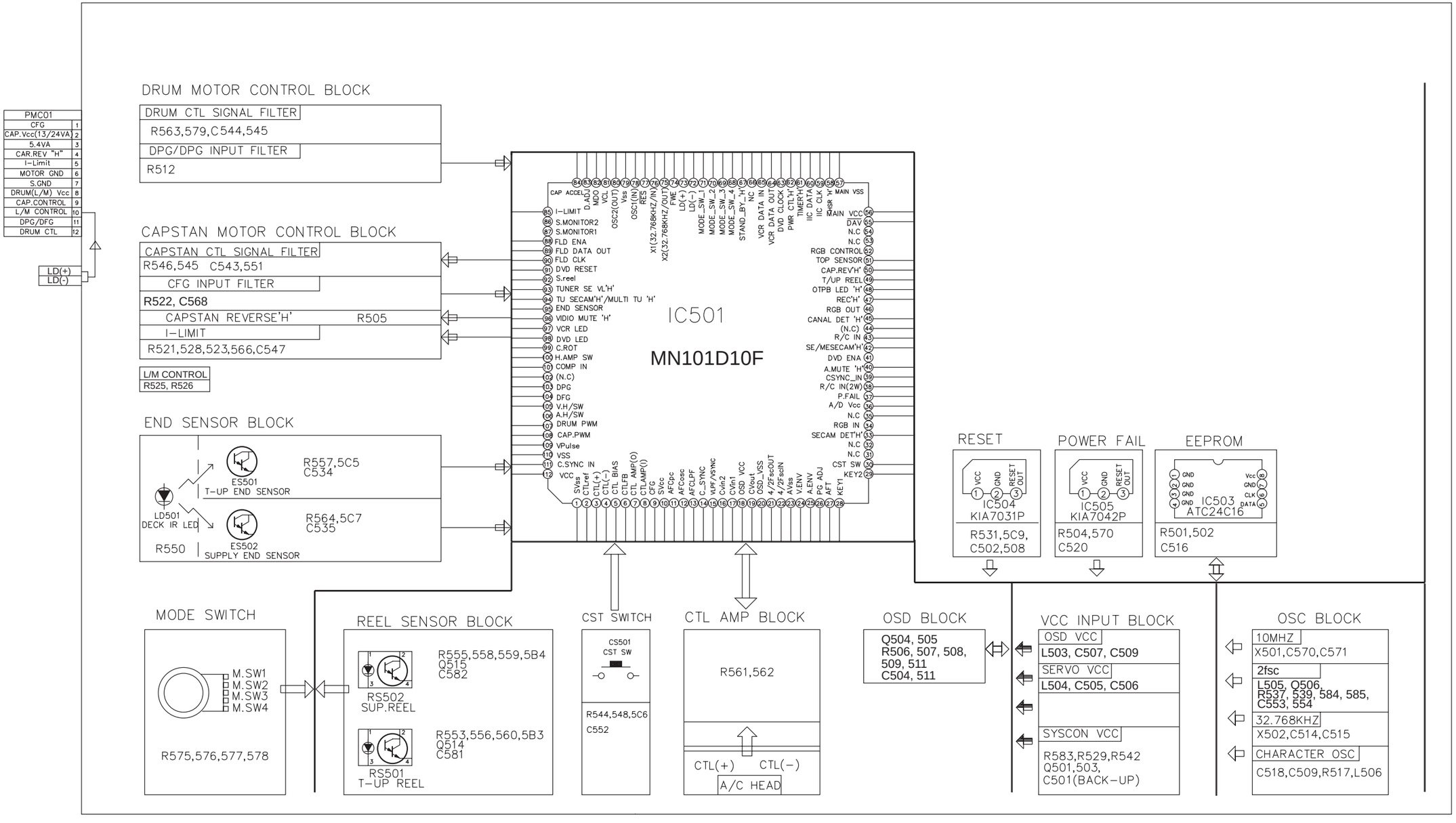

COMBI SCART

CIRCUIT DIAGRAMS

1. POWER(SMPS) CIRCUIT DIAGRAM

IMPORTANT SAFETY NOTICE

WHEN SERVICING THIS CHASSIS, UNDER NO CIRCUMSTANCES SHOULD THE ORIGINAL DESIGN BE MODIFIED OR ALTERED WITHOUT PERMISSION FROM THE LG CORPORATION. ALL COMPONENTS SHOULD BE REPLACED ONLY WITH TYPES IDENTICAL TO THOSE IN THE ORIGINAL CIRCUIT. SPECIAL COMPONENTS ARE SHADED ON THE SCHEMATIC FOR EASY IDENTIFICATION.

THIS CIRCUIT DIAGRAM MAY OCCASIONALLY DIFFER FROM THE ACTUAL CIRCUIT USED. THIS WAY, IMPLEMENTATION OF THE LATEST SAFETY AND PERFORMANCE IMPROVEMENT CHANGES INTO THE SET IS NOT DELAYED UNTIL THE NEW SERVICE LITERATURE IS PRINTED.

NOTE :

1. Shaded(■) parts are critical for safety. Replace only with specified part number.
2. Voltages are DC-measured with a digital voltmeter during Play mode.

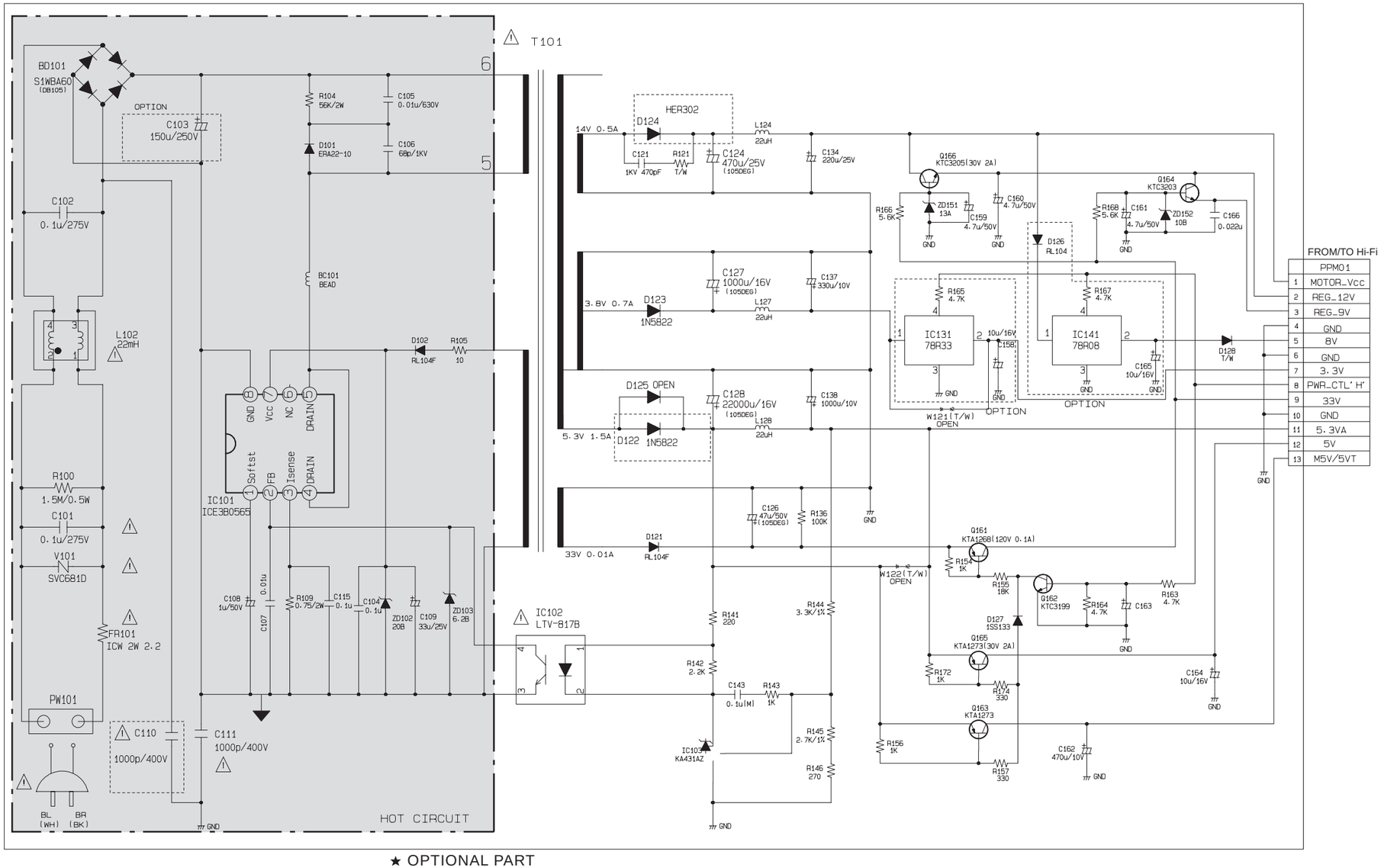

★ OPTIONAL PART

	C103
WIDE	68u/400V
NARROW	150u/250V
CTS, INDO-S.AFRICA	68u/450V

	D124	D122
WIDE	UF5402	D3S6M
NARROW	HER302	1N5822

	C110
N. T	1000p/400V
PAL	OPEN

	D126	R167	IC141	C165
ZORAN	OPEN	OPEN	OPEN	OPEN
M.T.K	OPEN	OPEN	OPEN	OPEN

NOTES) ⏚ Symbol denotes AC ground.
⏚ Symbol denotes DC chassis ground.

NOTE) ⚠ Warning
Parts that are shaded are critical With respect to risk of fire or electricial shock.

D' SCHEMATIC POWER
V10000' S
2005.11.09
3854R14921A

2. TU/IF CIRCUIT DIAGRAM

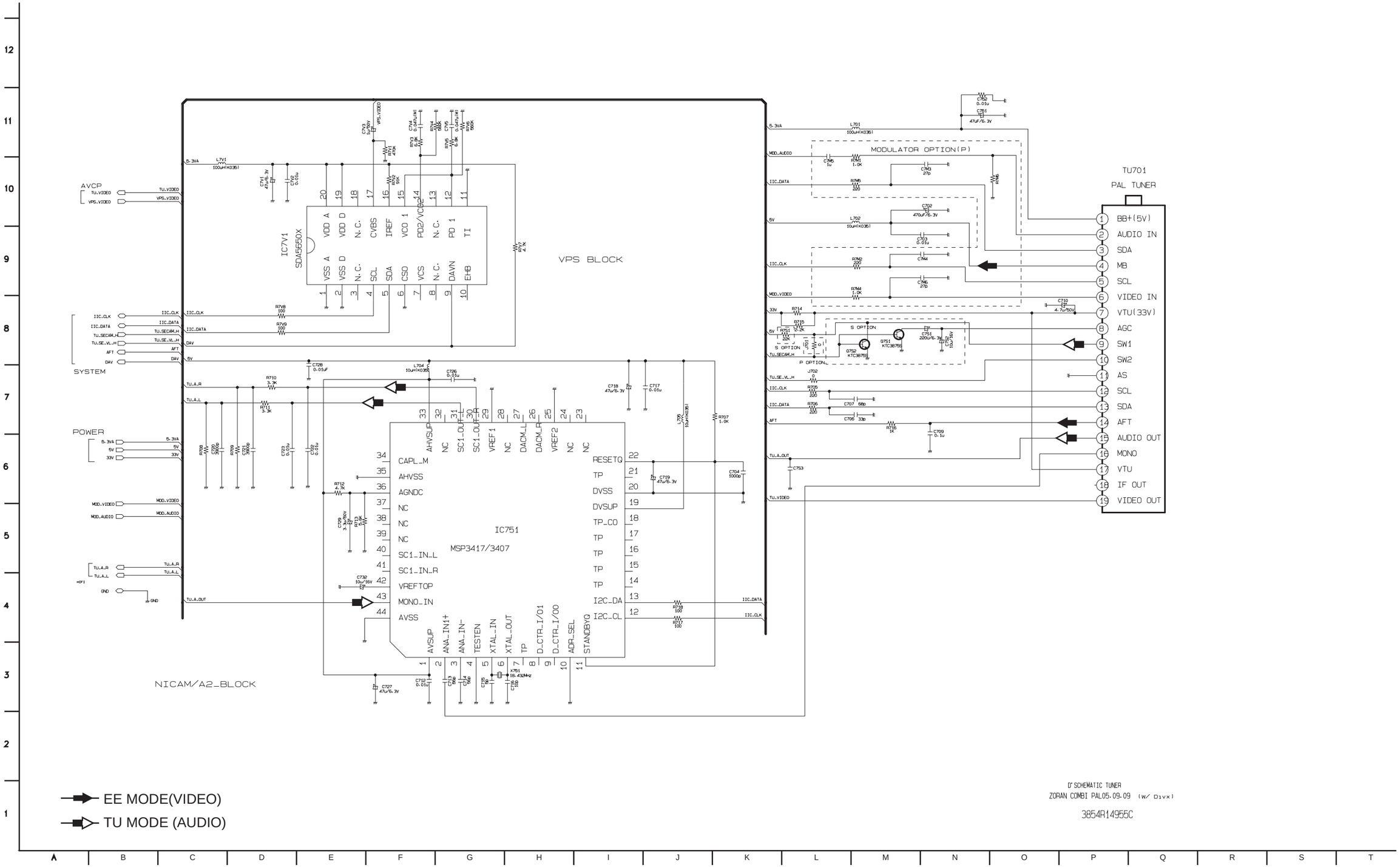

3. A/V CIRCUIT DIAGRAM

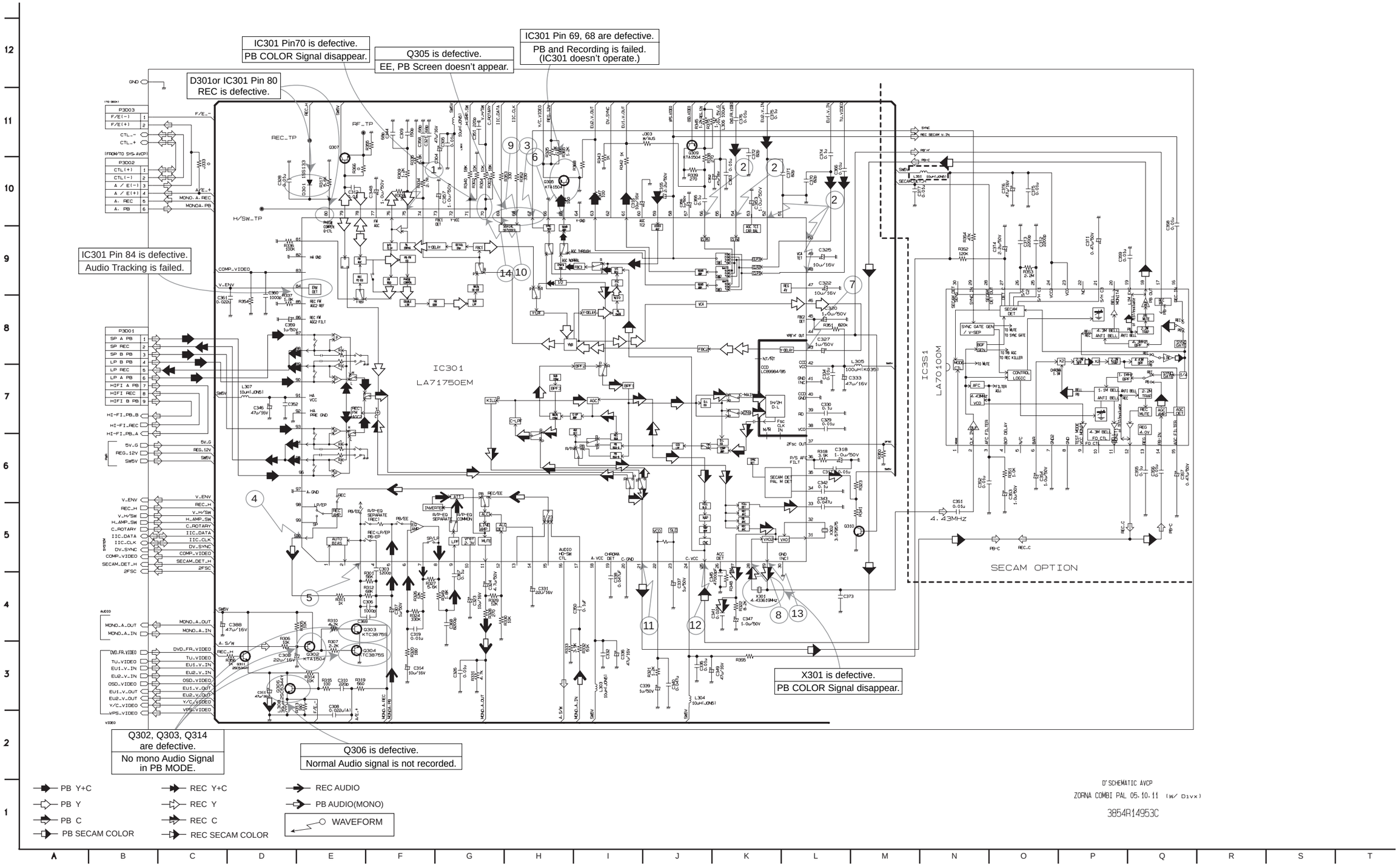

4. Hi-Fi CIRCUIT DIAGRAM

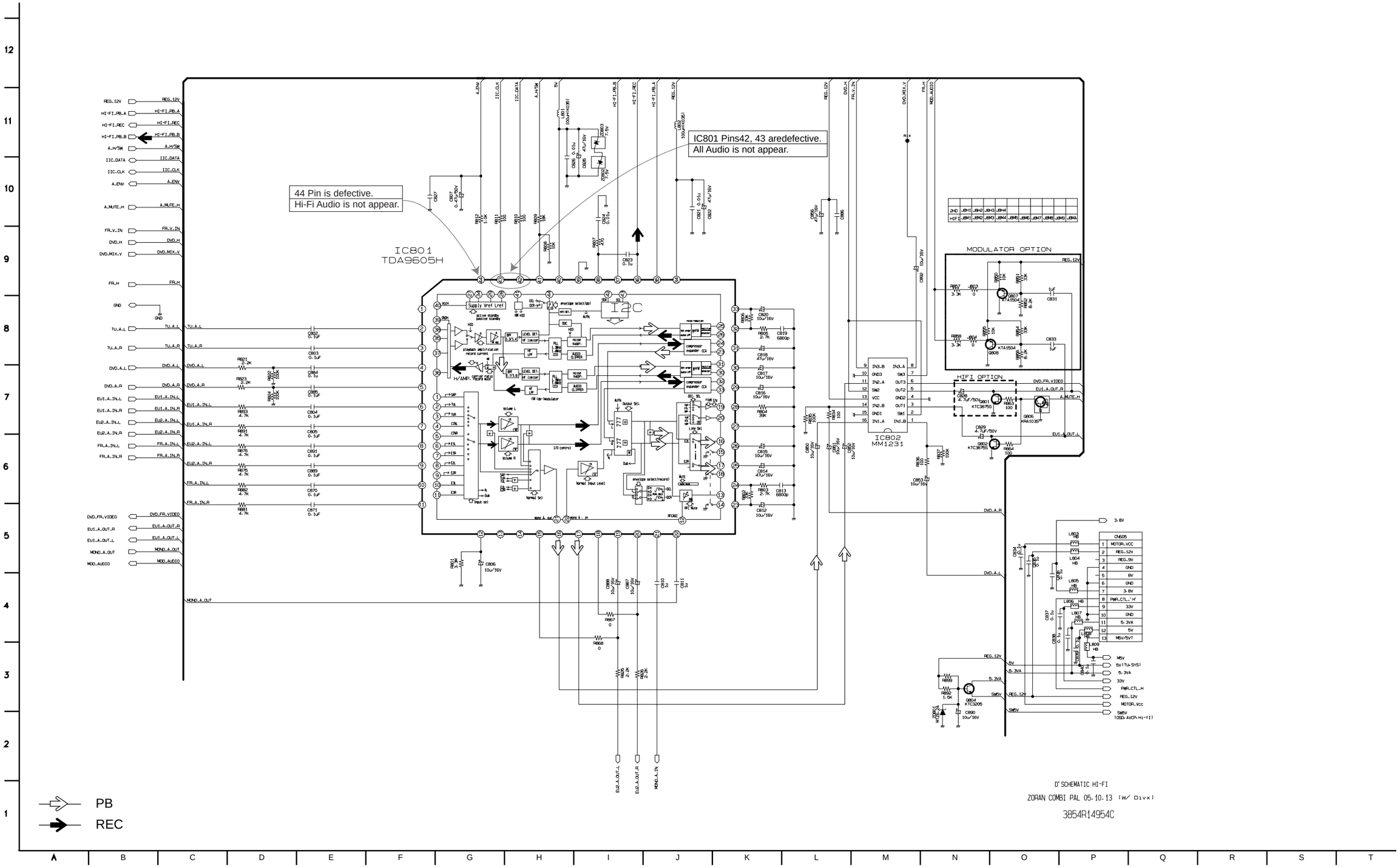

5. SCART(JACK) CIRCUIT DIAGRAM

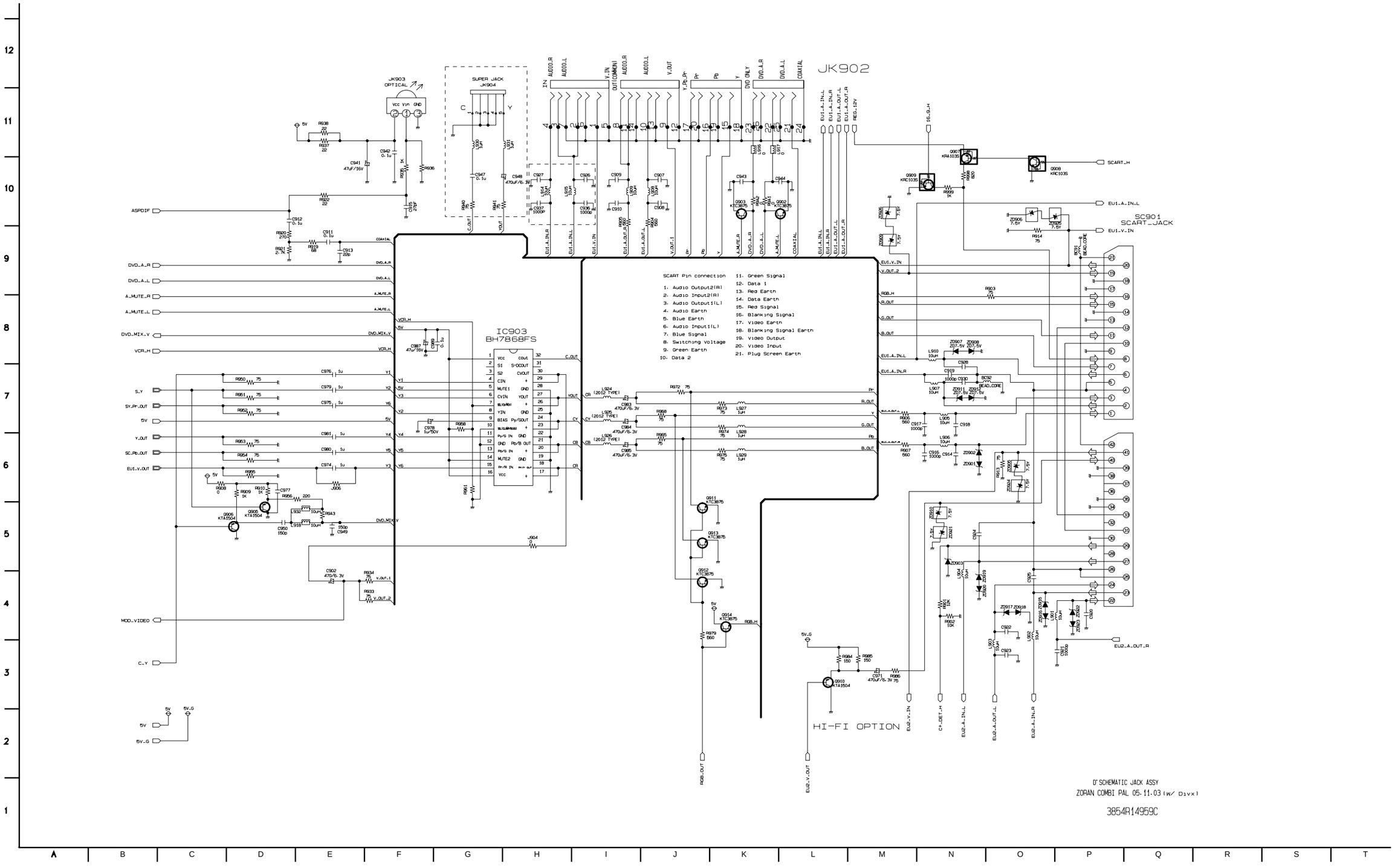

6. SYSTEM CIRCUIT DIAGRAM

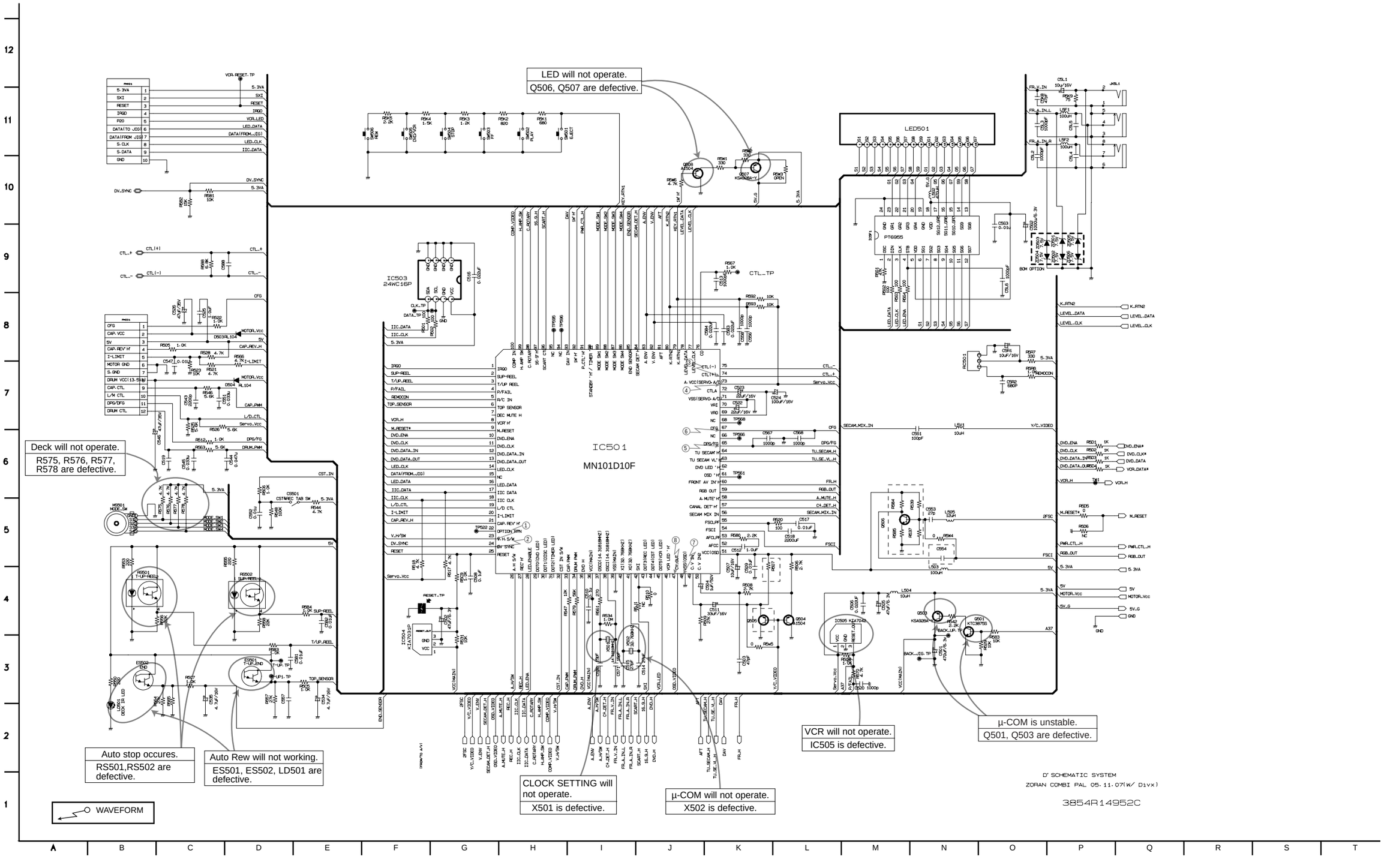

WAVEFORMS

* IC301 Oscilloscope Waveform

① 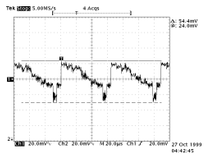

IC301 Pin 75
PB mode
500mvp-p

② 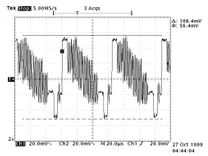

IC301 Pins 48, 50, 54, 56
Video in 1Vp-p

③ 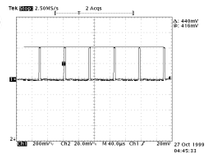

IC301 Pin 67
PB/REC mode
4.0Vp-p

④ 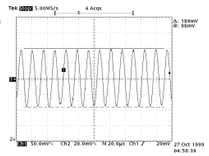

IC301 Pin 100
REC mode
1.1Vp-p

⑤ 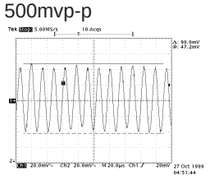

IC301 Pin 3
REC mode
2.0Vp-p

⑥ 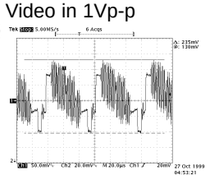

IC301 Pin 65
PB mode
2.02Vp-p

⑦ 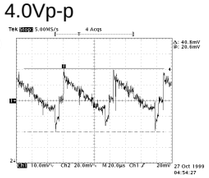

IC301 Pin 43
PB mode
400mVp-p

⑧ 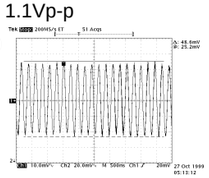

IC301 Pin 28
PB mode
400mVp-p

⑨ 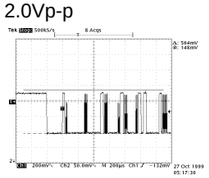

IC301 Pin 68
PB/REC mode
5Vp-p

⑩ 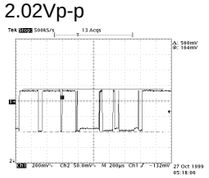

IC301 Pin 69
PB/REC mode
5Vp-p

⑪ 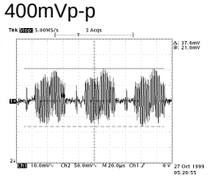

IC301 Pins 21
REC mode
340mVp-p

⑫ 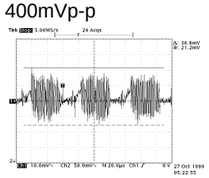

IC301 Pins 25
PB mode
300mVp-p

⑬ 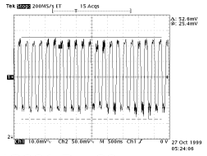

IC301 Pin 29
PB mode
400mVp-p

⑭ 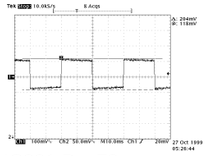

IC301 Pin 70
PB mode
3.6Vp-p

* IC501 Waveform Photographs

① 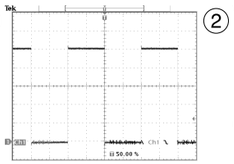

V.HSW
(IC501 Pin 23)
1V/10mS
REC/PB MODE

② 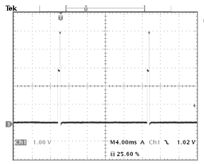

DV.SYNC
(IC501 PIN 24)
1V/100uS
QUE/REV MODE

③ 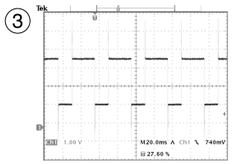

CTL(+)
(IC501 Pin 74)
1V/10mS

④ 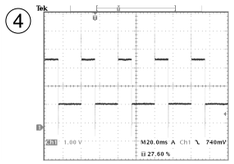

CTL(-)
(IC501 Pin 75)
1V/10mS

⑤ 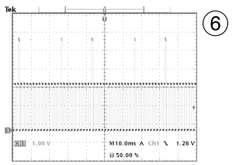

DFG/DFG
(IC501 PIN 65)
1V/10mS
REC/PB MODE

⑥ 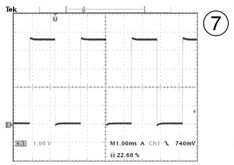

CFG
(IC501 Pin 67)
1V/10mS

⑦ 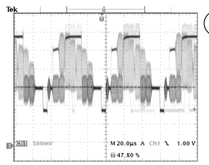

V.IN
(IC501 Pin 49)
500mV/20uS

⑧ 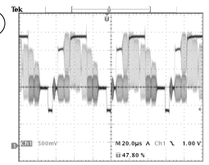

V.OUT
(IC501 Pin 47)
500mV/20uS
EE/PB MODE

CIRCUIT VOLTAGE CHART

MODE / PIN NO.	EE	PB
IC201		
1	1.67	1.67
2	1.88	1.89
3	1.28	1.28
4	1.71	1.72
5	1.28	1.29
6	0.01	0.01
7	0.01	0.01
8	5.24	5.25
9	0.01	0.01
10	0.02	0.02
11	2.62	2.67
12	2.53	2.61
13	2.72	2.72
14	2.39	2.38
15	2.6	2.6
16	2.59	2.56
17	3.44	3.44
18	1.58	1.57
19	5.24	5.24
20	1.1	1.1
21	5.24	5.24
22	0.01	0.01
23	1.7	2.05
24	0.43	0.4
25	2.9	2.86
26	1.7	1.7
27	1.7	1.7
28	3.26	3.26
IC301		
1	5.04	5.01
2	0.21	0.09
3	2.38	2.37
4	0.11	0.83
5	2.37	2.36
6	2.37	2.37
7	2.36	2.36
8	2.36	2.36
9	2.35	2.35
10	2.38	2.37
11	2.44	2.49
12	0.01	0.01
13	2.35	2.34
14	0.36	0.03
15	2.35	2.34
16	5.07	0.23
17	2.34	2.35
18	5.07	5.06
19	4.07	4.08
20	0.01	0.01
21	3.23	2.02
22	2.62	4.44
23	2.62	4.66
24	5.06	5.04
25	0.12	3.33

MODE / PIN NO.	EE	PB
26	0.92	1.08
27	0.03	2.15
28	3.98	3.96
29	2.61	2.61
30	0.01	0.01
31	0.46	1.55
32	4.74	4.96
33	2.05	2.09
34	0.05	0.07
35	2.54	2.54
36	2.72	2.77
37	1.91	1.91
38	1.99	2.02
39	9.32	9.3
40	0.01	0.01
41	0.01	0.01
42	5.01	5
43	2.06	2.71
44	0.04	4.17
45	2.55	1.16
46	2.42	3.28
47	4.1	4.1
48	3.09	3.12
49	2.91	2.84
50	1.93	1.93
51	0.01	0.01
52	1.86	1.94
53	1.33	2.31
54	1.93	1.98
55	5.18	5.17
56	2.14	2.86
57	1.44	1.01
58	1.96	1.85
59	2.9	2.92
60	1.45	1.57
61	1.57	2.63
62	0.16	0.16
63	1.57	2.77
64	0.01	0.01
65	0.83	2.51
66	0.01	0.01
67	4.4	0.01
68	5.01	4.99
69	5.01	5.04
70	1.88	2.57
71	0.01	0.01
72	5.05	5.03
73	2.18	1.01
74	2.25	3.95
75	2.19	0.73
76	2.19	0.84
77	1.66	0.56
78	2.62	3.32
79	2.12	1.99
80	0.99	0.99

MODE / PIN NO.	EE	PB
81	1.13	1.14
82	0.01	0.01
83	5.04	0.54
84	0.13	0.11
85	0.01	0.01
86	0.45	0.44
87	1.92	0.79
88	1.94	0.79
89	1.94	0.79
90	1.89	0.79
91	5.06	5.05
92	0.01	0.01
93	1.91	1.92
94	1.91	1.92
95	1.86	1.91
96	1.91	1.91
97	0.01	0.01
98	2.38	2.37
99	2.38	2.37
100	2.38	2.37
IC3S1		
1	2.52	2.52
2	2.42	2.42
3	3.57	3.57
4	2.58	2.58
5	0.08	0.08
6	0.56	0.56
7	0.01	0.01
8	0.01	0.01
9	3.05	3.05
10	2.52	2.52
11	2.67	2.67
12	3.23	3.23
13	4.04	4.04
14	2.51	2.51
15	1.98	1.98
16	3.22	3.22
17	0.04	0.04
18	0.13	0.13
19	2.28	2.28
20	2.59	2.59
21	1.96	1.96
22	0.08	0.08
23	5.03	5.03
24	5.03	5.03
25	1.56	1.56
26	1.56	1.56
27	2.04	2.04
28	0.19	0.19
29	4.38	4.38
30	2.09	2.09
IC402		
1	5.89	5.89
2	3.08	3.2
3	3.08	3.19

MODE / PIN NO.	EE	PB
4	0.01	0.01
5	3.08	3.22
6	3.08	3.22
7	5.9	5.9
8	11.79	11.79
IC501		
1	1.44	1.89
2	0.02	4.47
3	4.22	2.05
4	4.75	4.74
5	4.77	4.75
6	0.11	0.11
7	0.02	0.02
8	5.12	5.11
9	4.92	4.91
10	1.43	1.45
11	3.38	3.37
12	3.39	3.39
13	2.57	2.6
14	5.13	5.11
15	2.31	1.67
16	0.03	0.03
17	5.02	5.05
18	5.02	4.97
19	2.6	0.31
20	0.06	3.51
21	5.11	0.02
22	2.41	1.7
23	2.59	2.58
24	0.16	0.16
25	5.16	5.14
26	2.55	2.56
27	4.92	0.02
28	0.02	4.88
29	0.02	0.02
30	0.02	0.35
31	0.08	0.02
32	0.02	0.01
33	2.64	2.69
34	0.02	2.65
35	5.17	0.01
36	2.59	5.15
37	2.38	2.58
38	0.01	2.4
39	2.09	0.02
40	2.55	2.18
41	0.01	2.57
42	0.02	0.01
43	5.16	0.01
44	5.16	5.15
45	0.01	5.15
46	1.63	0.02
47	0.01	2.06
48	1.02	0.01
49	1.91	2.07

MODE / PIN NO.	EE	PB
50	4.96	2.62
51	3.07	4.97
52	2.47	3.05
53	2.45	2.48
54	2.03	2.46
55	0.01	2.03
56	0.01	0.02
57	0.09	0.01
58	5.08	0.02
59	0.09	0.02
60	5.09	5.07
61	0.11	0.02
62	0.77	0.02
63	0.15	0.03
64	2.59	5.09
65	1.38	1.38
66	1.65	1.74
67	0.16	2.43
68	2.39	1.69
69	2.59	2.58
70	2.59	2.58
71	0.01	0.01
72	2.28	2.57
73	5.16	5.14
74	2.28	2.57
75	0.02	2.58
76	2.58	2.56
77	0.01	0.02
78	0.01	0.02
79	5.16	5.14
80	5.15	5.14
81	4.51	4.52
82	0.15	0.12
83	0.22	0.87
84	0.2	0.2
85	0.15	0.14
86	5.18	5.17
87	5.17	5.18
88	5.18	5.17
89	0.01	0.02
90	5.15	5.13
91	5.01	5.01
92	0.02	0.02
93	5.17	5.16
94	2.36	1.44
95	0.02	0.02
96	5.12	5.11
97	5.12	0.02
98	2.58	2.56
99	0.02	0.02
100	0.69	0.49
IC503		
1	0.01	0.01
2	0.01	0.01
3	0.01	0.01

MODE / PIN NO.	EE	PB
4	0.01	0.01
5	5.04	5.05
6	5.01	4.99
7	0.01	0.01
8	5.16	5.16
IC5F1		
1	2.22	2.15
2	0.03	0.03
3	5.12	5.11
4	4.89	4.9
5	4.51	4.41
6	2.68	2.87
7	2.86	2.85
8	2.32	2.62
9	2.37	2.31
10	1.35	2.31
11	2.6	2.28
12	2.37	2.13
13	0.85	0.31
14	1.95	0.3
15	2.38	2.36
16	2.36	2.33
17	2.37	2.35
18	4.52	4.43
19	0.01	0.01
20	2.4	2.37
21	0.27	2.33
22	2.39	2.38
23	2.52	2.49
24	0.01	0.01
IC601		
1	0.01	1.7
2	3.29	3.26
3	3.29	3.27
4	0.08	0.4
5	0.05	0.4
6	0.05	0.3
7	1.72	1.9
8	1.72	0.8
9	2.78	0.5
10	1.72	0.7
11	0.01	1.6
12	0.01	0.01
13	3.44	3.28
14	0.01	2.1
15	3.43	3.1
16	1.71	2.7
17	3.31	3.1
18	1.7	2.2
19	0.7	1
20	0.01	0.01
21	3.39	3.24
22	2.6	2.9
23	3.39	3.25
24	2.4	2.5

MODE / PIN NO.	EE	PB
25	1.86	1.9
26	1.1	1.63
27	2.5	1.08
28	0.01	0.01
29	0.01	0.01
30	2.7	1.22
31	0.01	0.05
32	0.01	0.01
33	2.7	3.2
34	3.28	3.24
35	0.4	1.13
36	1.7	1.5
37	2	2.5
38	1.7	3.9
39	0.01	1.2
40	1.7	1.5
41	3.4	3.28
42	0.01	1.5
43	1.71	2.7
44	1.82	3.19
45	1.69	1.6
46	1.7	1.5
47	3.41	3.28
48	1.68	3.04
49	1.68	3.03
50	0.01	0.01
51	3.39	3.27
52	3.39	3.29
53	1.63	1
54	0.13	0.5
55	0.13	1.26
56	0.12	0.5
57	1.64	1
58	3.39	3.28
59	0.12	0.4
60	1.64	1.5
61	0.12	0.5
62	0.01	0.01
63	0.01	0.4
64	1.85	1.8
65	1.38	0.03
66	0.01	0.01
67	0.03	0.34
68	3.39	3.28
69	0.01	0.01
70	3.36	3.22
71	0.09	0.37
72	0.01	0.01
73	0.01	3.23
74	3.37	3.25
75	3.38	3.28
76	3.39	3.28
77	3.38	3.17
78	0.01	0.02
79	0.01	0.01

MODE / PIN NO.	EE	PB
80	1.6	1.49
81	3.39	3.27
82	1.59	1.91
83	0.01	0.01
84	1.4	1.25
85	1.8	1.5
86	1.6	1
87	3.39	3.28
88	1.6	1.3
89	1.8	2
90	1.7	1.5
91	0.01	0.01
92	1.61	1.89
93	0.01	1.8
94	1.29	1.99
95	0.01	0.01
96	1.69	2.2
97	3.39	3.28
98	1.69	1.85
99	1.78	1.3
100	1.58	1.52
101	0.01	0.01
102	1.61	1.81
103	1.61	1.9
104	1.61	1.7
105	3.39	3.28
106	0.01	0.01
107	0.01	0.01
108	0.01	0.01
109	0.01	0.01
110	1.68	1.61
111	0.02	0.01
112	0.02	0.01
113	0.01	1.07
114	0.01	0.01
115	1.69	1.64
116	1.69	1.61
117	0.01	0.01
118	1.69	1.5
119	3.39	3.25
120	0.01	0.01
121	0.01	0.01
122	0.01	0.01
123	0.01	0.01
124	1.7	1.64
125	3.39	3.28
126	0.01	0.01
127	0.07	3.25
128	0.01	0.01
129	0.01	0.01
130	0.01	0.01
131	1.85	2.35
132	3.37	0.04
133	3.38	3.21
134	3.38	3.21

MODE / PIN NO.	EE	PB
135	3.03	0.01
136	0.03	0.01
137	0.01	3.26
138	3.39	3.25
139	0.01	0.01
140	0.01	0.01
141	3.29	3.35
142	1.89	2.32
143	1.66	2.6
144	1.66	2.26
145	0.01	0.01
146	0.01	0.01
147	0.75	1.23
148	0.01	0.01
149	3.37	3.21
150	0.98	1.32
151	0.98	1.31
152	3.39	3.26
153	1.28	1.62
154	1.28	1.65
155	0.01	0.01
156	0.01	0.01
157	1.65	1.31
158	1.65	1.31
159	3.25	3.36
160	2.64	3.21
161	3.25	3.2
162	2.64	3.21
163	3.25	3.21
164	2.64	3.2
165	0.01	0.01
166	2.64	3.14
167	1.88	2.15
168	0.01	0.01
169	2.64	2.1
170	1.88	2.3
171	2.01	2.3
172	1.8	2.2
173	1.74	2.3
174	1.71	1.69
175	0.11	1.68
176	0.1	0.16
177	3.15	0.36
178	3.15	3.2
179	3.13	3.25
180	0.01	0.01
181	0.01	0.01
182	10.8	2.3
183	0.01	3.25
184	0.01	0.01
185	0.01	0.2
186	3.29	3.26
187	3.28	3.26
188	0.01	0.02
189	0.01	0.01

MODE / PIN NO.	EE	PB
190	0.1	1.3
191	1.2	3.26
192	3.3	0.01
193	0.01	0.01
194	0.01	0.01
195	1.7	1.36
196	1.8	0.01
197	0.01	2.41
198	1.4	3.26
199	3.3	0.01
200	0.01	0.01
201	0.01	1.36
202	1.51	2.9
203	3.9	3.26
204	3.3	3.25
205	0.01	3.28
206	3.24	3.28
207	3.25	3.27
208	3.24	0.39
IC603		
1	3.37	3.38
2	1.67	2.25
3	3.37	3.37
4	1.73	1.77
5	1.8	1.63
6	0.01	0.01
7	1.71	2.2
8	1.6	2.23
9	3.38	3.37
10	3.38	2.07
11	1.97	1.03
12	0.01	0.01
13	0.16	1.05
14	3.38	3.37
15	0.01	0.01
16	3.36	3.25
17	3.36	3.29
18	3.34	3.18
19	3.34	3.31
20	0.19	0.39
21	3.34	3.13
22	1.2	2.05
23	0.15	0.39
24	0.14	0.56
25	0.38	0.34
26	0.3	0.49
27	0.34	0.45
28	0.01	0.01
29	1.93	0.33
30	1.94	0.24
31	0.15	1.58
32	0.17	0.08
33	0.04	0.19
34	0.27	3.15
35	0.27	2.56

MODE / PIN NO.	EE	PB
36	0.29	3.56
37	3.38	3.37
38	1.78	1.77
39	0.01	0.08
40	0.04	0.08
41	0.04	0.01
42	1.9	1.39
43	3.37	3.37
44	1.64	1.8
45	1.7	1.37
46	0.04	0.01
47	1.68	1.53
48	0.02	1.99
49	3.38	1.68
50	1.89	0.25
51	0.81	1.48
52	0.01	0.47
53	1.35	1.26
54	0.01	0.01
IC604		
1	0.4	0.36
2	1.28	0.35
3	1.22	1.67
4	1.63	1.36
5	1.05	0.35
6	1.54	0.33
7	1.06	1.36
8	2.33	2.28
9	0.02	0.34
10	0.07	0.31
11	3.37	3.37
12	4.91	4.91
13	3.37	3.38
14	3.37	3.38
15	1.05	0.31
16	0.07	1.58
17	1.06	2.76
18	2.63	1.2
19	1.46	3.37
20	1.54	3.38
21	0.01	3.37
22	0.01	3.38
23	0.07	3.34
24	3.33	3.34
25	0.01	3.38
26	3.37	0.01
27	0.01	3.38
28	3.37	0.02
29	0.01	0.01
30	0.34	0.01
31	0.33	0.01
32	2.86	2.9
33	2.86	0.02
34	0.01	1.78
35	0.01	1.88

MODE / PIN NO.	EE	PB
36	0.02	3.38
37	3.37	1.96
38	2.87	1.92
39	2.95	1.89
40	0.01	0.26
41	0.02	1.92
42	0.01	1.96
43	2.95	1.95
44	2.88	1.94
45	2.88	0.01
46	0.01	3.38
47	3.37	3.37
48	0.01	3.09
IC605		
1	0.01	0.01
2	0.01	0.01
3	0.01	0.01
4	0.01	0.01
5	0.12	0.4
6	3.35	3.35
7	0.01	0.01
8	3.35	3.35
IC751		
1	5.05	5.05
2	1.52	1.52
3	1.52	1.52
4	0.01	0.01
5	2.4	2.41
6	2.35	2.37
7	0.98	0.99
8	0.01	0.01
9	0.01	0.01
10	0.01	0.01
11	5.05	5.05
12	5.01	5.02
13	5.02	5.04
14	1.16	1.18
15	1.06	1.09
16	1.08	1.09
17	1.04	1.05
18	1.03	1.05
19	5.02	5.02
20	0.01	0.01
21	1.06	1.07
22	5.05	5.05
23	0.01	0.01
24	0.01	0.01
25	0.01	0.01
26	0.01	0.01
27	0.05	0.05
28	0.03	0.04
29	0.01	0.01
30	2.7	2.71
31	2.7	2.72
32	0.04	0.04

MODE / PIN NO.	EE	PB
33	5.05	5.05
34	4.1	4.1
35	0.01	0.01
36	2.72	2.72
37	0.04	0.04
38	0.04	0.04
39	0.04	0.04
40	2.72	2.72
41	2.71	2.71
42	2.59	2.59
43	2.45	2.45
44	0.01	0.01
IC7V1		
1	0.01	0.01
2	0.01	0.01
3	0.05	0.07
4	5.03	5.01
5	5.04	5.03
6	0.01	0.01
7	5.16	5.16
8	0.05	0.05
9	5.16	5.16
10	5.16	5.16
11	0.01	0.01
12	0.02	0.09
13	0.07	0.08
14	0.01	0.01
15	0.01	0.01
16	1.56	1.56
17	1.02	1.02
18	0.07	0.07
19	5.16	5.15
20	5.16	5.15
IC801		
1	3.84	3.84
2	3.83	3.84
3	3.83	3.82
4	3.83	3.85
5	3.83	3.84
6	3.84	3.86
7	3.84	3.86
8	3.83	3.83
9	3.83	3.85
10	3.83	3.85
11	3.84	3.84
12	0.36	0.02
13	3.88	3.88
14	0.13	0.01
15	0.12	0.01
16	6.09	6.1
17	6.09	6.09
18	0.1	0.01
19	6.08	6.08
20	6.08	6.08
21	4.6	4.6

MODE / PIN NO.	EE	PB
22	3.77	3.83
23	3.87	3.81
24	3.88	3.79
25	3.89	3.88
26	0.79	0.79
27	0.01	0.56
28	3.85	3.85
29	3.89	3.88
30	0.79	0.8
31	3.88	3.87
32	3.89	3.85
33	3.88	3.86
34	11.71	11.71
35	0.66	0.65
36	0.47	2.27
37	0.48	0.65
38	0.01	0.01
39	0.66	0.76
40	5.08	5.06
41	0.01	0.92
42	5.03	5.04
43	4.99	4.97
44	0.08	0.95
IC802		
1	5.78	5.78
2	4.99	4.99
3	5.09	5.09
4	0.01	0.01
5	5.07	5.07
6	5.88	5.88
7	0.02	0.02
8	6.57	6.57
9	0.41	0.47
10	0.01	0.01
11	6.59	6.59
12	4.99	5.01
13	11.78	11.78
14	5.76	0.48
15	0.01	0.01
16	6.58	6.58
IC903		
1	5.1	5.1
2	0.11	0.11
3	0.09	0.09
4	2.23	2.23
5	5.1	5.1
6	1.24	1.24
7	0.02	0.02
8	1.58	1.58
9	2.24	2.24
10	0.01	0.01
11	1.41	1.41
12	0.01	0.01
13	2.21	2.21
14	5.11	5.1

MODE / PIN NO.	EE	PB
15	2.22	2.22
16	5.11	5.11
17	2.3	2.3
18	2.3	2.3
19	0.01	0.01
20	2.3	2.3
21	2.3	2.3
22	0.01	0.01
23	1.18	1.18
24	1.06	1.06
25	0.01	0.01
26	1.41	1.41
27	1.51	1.51
28	0.01	0.01
29	1.5	1.5
30	1.62	1.62
31	0.06	0.06
32	2.35	2.35

Transistor	STOP +	STOP -	PLAY +	PLAY -
C201	5.11	0	5.11	0
C208	3.36	3.21	3.37	3.21
C209	3.37	3.21	3.37	3.21
C214	5.33	0	5.33	0
C216	3.38	0	3.38	0.01
C217	1.82	0	1.82	0
C223	3.37	0	3.37	0
C302	5.08	0	5.08	0
C304	5.03	0	5.03	0
C307	2.36	0	2.37	0
C308	0.01	0	0.01	0
C311	0.12	0	0.12	0
C314	2.37	0	2.37	0
C315	2.95	2.29	2.93	2.45
C316	1.56	0	1.56	0
C318	2.87	0	2.88	0
C320	2.52	0	2.53	0
C322	4.11	0	4.12	0
C323	2.37	0	2.37	0
C324	2.55	0	2.55	0
C325	2.92	0	3.14	0
C327	2.68	2.39	2.68	2.39
C331	0.03	0	0.03	0
C333	5	0	5.01	0
C336	50.8	0	5.08	0
C337	2.69	0	2.69	0
C339	2.64	0	2.66	0
C346	5.07	0	5.07	
C347	2.15	0	2.16	0
C348	1.54	0	1.54	0
C349	5.07	0	5.06	0
C356	2.05	0	2.11	0
C357	2.07	0	2.07	0
C388	5.08	0	5.09	0
C3S3	3.56	0	3.56	0
C3S4	0.43	0	0.43	0
C3S7	3.15	0	3.15	0
C3T1	1.98	0	1.98	0
C3T2	2.49	0	2.49	0
C3T3	2.51	0	2.51	0
C3T4	2.25	0	2.25	0
C3T6	5.06	0	5.06	0
C413	5.1	0	5.1	0
C414	5.11	0	5.11	0
C414	5.11	0	5.11	0
C416	5.89	0	5.89	0
C417	5.88	0	5.88	0
C501	5.16	0	5.16	0
C502	5.15	0	5.14	0
C504	3.17	2.16	3.09	2.47
C505	5.14	0	5.14	0
C507	4.99	0	4.98	0
C511	3.2	1.43	3.25	1.75
C511	6.56	0	6.56	0
C522	2.58	0	2.57	0

Transistor	STOP +	STOP -	PLAY +	PLAY -
C523	2.58	2.57	2.58	2.56
C524	2.58	0	2.58	0
C534	0.17	0	0.17	0
C535	0.01	0	0.01	0
C5G2	4.6	0	4.59	0
C5R1	4.8	0	4.74	0
C612	3.39	0	3.39	0
C614	3.32	0	3.32	0
C616	3.31	0	3.31	0
C618	1.78	0	1.78	0
C642	1.8	0	1.8	0
C643	3.37	0	3.38	0
C673	3.38	0	3.38	0
C6C9	3.38	0	3.38	0
C702	4.95	0	4.94	0
C710	30.29	0	30.29	0
C718	5.05	0	5.06	0
C719	5.05	0	5.05	0
C727	5.06	0	5.06	0
C729	2.74	0	2.74	0
C732	2.59	0	2.59	0
C751	5.11	0	5.11	0
C7S1	4.93	0.51	4.93	0.51
C7S2	4.92	0	4.92	0
C7V1	5.87	0	5.87	0
C7V3	3.3	1.68	3.3	1.68
C806	0.06	0	0.06	0
C807	0.09	0	3.22	0
C812	3.89	0	3.89	0
C814	3.89	0	3.91	0
C815	0.76	0	0.76	0
C816	3.89	0	3.89	0
C817	0.76	0	0.76	0
C818	3.9	0	3.9	0
C820	3.88	0	3.88	0
C822	11.7	0	11.7	0
C825	5.07	0	5.07	0
C828	5.88	2.55	5.88	2.55
C829	5.87	2.53	5.86	2.53
C830	2.96	2.51	2.97	2.51
C831	2.35	2.06	2.35	2.14
C832	2.97	2.59	2.97	2.96
C833	2.35	2.3	2.35	2.3
C850	6.56	6.11	6.56	6.11
C851	5.77	0	5.77	0
C852	6.57	6.11	6.57	6.11
C853	5.77	0	5.77	0
C856	11.79	0	11.79	0
C887	6.11	0	6.11	0
C888	6.11	0	6.11	0
C892	6.58	1.11	6.57	1.11
C902	1.35	0.06	1.35	0.06
C904	1.35	0.33	1.35	0.33
C941	5.07	0	5.07	0
C945	0.01	0	0.01	0

Transistor	STOP +	STOP -	PLAY +	PLAY -
C946	0.01	0	0.01	0
C948	1.57	1.64	1.58	1.64
C971	4.17	4.15	2.85	2.82
C974	1.61	0.95	1.61	0.95
C975	2.22	0.04	2.22	0.04
C976	2.23	0.65	2.23	0.65
C978	2.24	0	2.24	0
C979	1.63	0.46	1.63	0.46
C980	2.23	0.32	2.23	0.32
C981	1.41	0.16	1.41	0.16
C983	2.31	0.32	2.31	0.32
C984	1.13	0.11	1.13	0.11
C985	2.32	0.41	2.32	0.41
C987	5.1	0	5.09	0

Tran-sistor	STOP			PLAY		
	Base	Emitter	Collector	Base	Emitter	Collector
Q201	2.29	2.45	3.18	2.29	2.45	3.17
Q202	1.83	1.91	2.59	1.83	1.91	2.59
Q204	3.4	2.89	3.67	3.39	2.86	3.65
Q205	3.21	3.27	3.34	3.21	3.27	3.34
Q206	2.9	5.26	3.67	2.9	5.26	3.65
Q207	2.54	4.88	3.37	2.54	4.6	3.36
Q208	5.02	0.19	0.01	5.02	0.19	0.01
Q209	2.34	2.89	3.34	2.34	2.89	3.34
Q302	-2.07	5.08	5.09	-1.27	5.09	5.09
Q303	0.14	-0.99	0.22	0.23	-0.96	0.22
Q304	0.01	-0.77	0.21	0.01	-1.08	0.12
Q305	0.01	1.88	2.55	0.01	1.88	2.55
Q309	0.01	1.65	2.29	0.01	1.65	2.29
Q401	0.01	-0.68	5.91	0.01	-0.68	5.91
Q402	0.01	-0.65	5.9	0.01	-0.66	5.9
Q403	5.09	0.01	0.01	5.09	0.01	0.01
Q404	-0.75	5.09	5.09	-0.75	5.09	5.08
Q405	-0.91	11.79	11.85	-0.91	11.79	11.85
Q501	0.03	0.7	0.01	0.03	0.7	0.01
Q504	0.01	2.52	3.13	0.01	2.54	3.13
Q505	0.01	2.54	3.19	0.01	2.52	3.19
Q506	3.81	0.6	0.04	2.84	0.6	0.04
Q601	0.01	0.04	0.19	0.01	0.05	0.19
Q7S1	4.09	0.02	0.01	4.14	0.18	0.01
Q7S2	0.02	5.1	0.01	0.02	5.11	0.01
Q801	0.13	-0.84	0.01	0.13	-0.84	0.01
Q802	0.12	-0.76	0.01	0.05	-0.84	0.01
Q807	0.01	0.09	2.97	0.01	0.09	2.97
Q808	0.01	2.36	2.97	0.01	2.36	2.97
Q905	0.19	0.37	1.01	0.19	0.37	1.01
Q906	0.01	0.14	0.15	0.01	0.14	0.15
Q907	11.79	0.02	11.85	11.79	0.02	11.85
Q908	0.02	5.11	0.01	0.02	5.11	0.01
Q909	0.08	5.11	0.01	0.08	5.11	0.01
Q910	0.01	3.55	4.22	0.01	3.55	4.22
Q911	0.01	0.74	0.01	0.01	0.74	0.01
Q912	0.01	0.74	0.01	0.01	0.74	0.01
Q913	0.01	0.74	0.01	0.01	0.74	0.01
Q914	5.06	3.41	2.72	5.06	3.41	2.72

PRINTED CIRCUIT DIAGRAMS

1. MAIN P.C.BOARD (TOP SIDE)

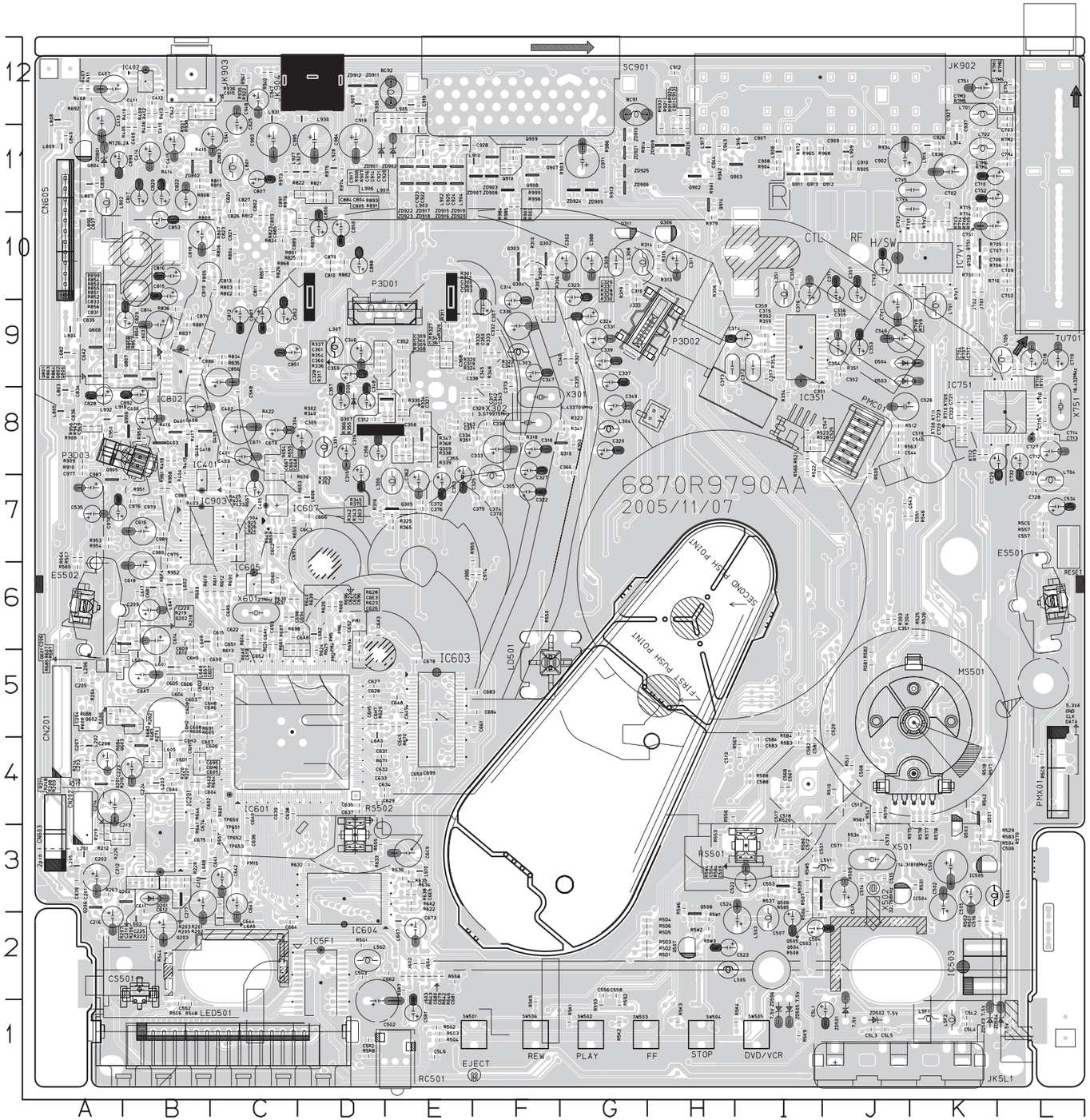

LOCATION GUIDE

BC91	G12	C362	E7	C556	G2	C675	C3	C7V3	J10	C942	B12	L504	K3	Q303	F10	R315	H10	R518	K4	R607	A5	R7V2	K10	R958	B7
BC93	E12	C363	E8	C557	L7	C678	E5	C7V4	C11	C963	H11	L505	K2	Q304	F10	R316	D7	R520	I3	R608	A5	R7V3	K10	R961	B7
C201	A3	C366	G8	C558	G2	C679	E2	C7V5	K11	C944	H11	L5F1	K1	Q305	E7	R317	E9	R521	J8	R609	B6	R7V4	K10	R965	I11
C202	A3	C367	E9	C567	I4	C680	E2	C802	C10	C947	C12	L5F2	K1	Q306	H10	R318	F8	R522	J8	R610	B6	R7V5	K10	R968	J11
C203	A4	C368	E9	C568	I4	C681	E2	C803	C10	C948	C12	L502	D2	Q307	E8	R319	G10	R523	I8	R611	C5	R7V6	K10	R972	I11
C204	A5	C369	E9	C570	J3	C683	F5	C804	D11	C949	A8	L5V1	J3	Q309	E8	R320	E9	R525	K6	R612	C6	R7V7	K10	R973	C11
C205	A5	C370	F7	C571	J3	C684	F5	C805	D11	C950	A8	L601	B5	Q310	G8	R321	G9	R526	K6	R613	C5	R7V8	K10	R974	D11
C206	A5	C371	E8	C581	I5	C692	D6	C806	D10	C971	E8	L602	B6	Q311	G10	R322	F9	R528	I8	R614	C5	R7V9	K10	R975	D11
C207	A4	C372	E7	C583	I4	C693	C6	C807	C11	C974	F6	L603	B2	Q403	B8	R323	G8	R529	K3	R621	C6	R801	D10	R979	H10
C208	A4	C373	F8	C584	I4	C694	C6	C810	D10	C975	B7	L604	B5	Q404	B8	R324	E9	R531	K3	R622	E3	R802	C10	R984	F11
C209	B6	C374	F7	C588	I4	C695	B4	C811	C10	C976	B7	L605	B4	Q405	B8	R325	E9	R534	J3	R623	D5	R803	C10	R985	F11
C210	B3	C375	F7	C592	I5	C696	D5	C812	C9	C977	A8	L606	D7	Q501	K4	R326	E9	R537	I3	R624	D5	R804	C10	R986	G11
C211	B3	C376	E7	C502	D1	C697	C7	C813	C10	C978	A7	L607	E2	Q503	K3	R327	E9	R539	I3	R625	D6	R805	C10	R998	F11
C212	A3	C388	G10	C503	D2	C698	C6	C814	B9	C979	B7	L609	B6	Q504	I3	R328	F9	R542	K4	R626	D6	R806	C10	R999	F11
C213	B3	C351	J8	C5K8	C8	C699	E4	C815	B10	C980	B7	L610	E3	Q505	I3	R329	F9	R544	B2	R628	D6	R807	C11	R9A1	H11
C214	A4	C352	J9	C5L1	J1	C6A1	C6	C816	B10	C981	B7	L682	A9	Q506	I3	R330	F9	R546	K7	R629	D5	R808	B11	R9A2	H11
C216	A2	C353	J9	C5L2	K1	C6A2	A9	C817	B11	C983	C11	L6A3	D5	Q507	H2	R331	F9	R547	J4	R630	C6	R809	B10	R9A3	A8
C217	B3	C354	J9	C5L3	J1	C6A3	D6	C818	B10	C984	D11	L6A5	C2	Q508	H2	R332	F9	R548	B1	R631	C6	R810	B11	RC501	E1
C219	A4	C355	J9	C5L4	K1	C6A4	B4	C819	C10	C985	D11	L6A7	B6	Q601	A5	R333	F9	R550	F6	R632	D3	R811	B11	RESET+TR7	
C220	B6	C356	J9	C5L5	J1	C6A5	C6	C820	B11	C987	A7	L6A8	B3	Q602	B5	R334	E8	R553	H3	R633	D3	R812	C11	RF+TP	J10
C223	B4	C357	J10	C5L6	E1	C6A6	C5	C821	C10	C989	B7	L6A9	B5	Q603	B4	R335	E8	R555	D3	R634	E3	R821	C11	R5501	I3
C224	B4	C358	I10	C5R1	E1	C6A7	B5	C822	B11	CN201	A5	L6B2	D6	Q751	K10	R336	D9	R556	H4	R635	E3	R822	D11	R5502	D3
C225	B3	C359	I9	C5R2	D1	C6A8	D6	C823	C11	CN202	A4	L701	K12	Q752	K10	R337	D9	R557	L7	R636	E3	R823	C10	SC901	G12
C302	G10	C371	J10	C551	I3	C6B1	B6	C824	C11	CN603	A3	L702	K11	Q801	A9	R338	E9	R558	E2	R638	E3	R824	C10	SW501	F1
C303	E9	C372	I9	C602	B4	C6C2	C7	C825	C11	CN605	A10	L704	L7	Q802	B9	R339	E8	R561	J3	R639	C6	R825	D10	SW502	G1
C304	D8	C373	H9	C604	B4	C6C3	D7	C826	C11	CS501	B2	L705	L9	Q804	A11	R340	D8	R563	J8	R640	C6	R826	C10	SW503	G1
C305	D8	C374	I9	C605	B4	C6C9	E3	C827	C11	CTL+TP	J10	L7V1	K9	Q805	B9	R341	G8	R564	A7	R641	C6	R827	C10	SW504	H1
C306	E9	C375	I9	C606	B4	C6D1	B4	C828	A9	D201	B3	L801	C11	Q807	A9	R342	E8	R565	A6	R642	E2	R835	C9	SW505	I1
C307	F9	C376	I10	C607	B4	C6D2	B5	C829	B9	D301	D8	L802	A11	Q808	A9	R343	E8	R566	I8	R643	E2	R836	B9	SW506	F1
C308	G10	C377	I9	C608	B5	C6D3	B5	C831	A9	D401	B8	L803	A8	Q902	H11	R345	E8	R567	I4	R644	B4	R837	B9	TP650	C4
C309	E9	C401	C8	C609	B5	C6D4	B5	C833	A9	D503	J9	L804	A9	Q903	I11	R347	E8	R570	K3	R646	C4	R850	A9	TP651	C3
C310	G10	C402	C8	C610	B6	C6D5	B5	C834	A8	D504	J9	L805	A8	Q905	A7	R348	F9	R575	K4	R649	C7	R851	A9	TP652	C3
C311	H10	C403	C8	C611	B3	C6D6	B5	C835	A9	E5501	L7	L806	A11	Q906	B8	R349	E9	R576	K4	R650	C7	R852	A9	TP653	C3
C312	F9	C405	C7	C612	B2	C6D7	B5	C836	A8	E5502	A5	L807	A11	Q907	F11	R350	G8	R577	K4	R651	C3	R854	A10	TU701	L12
C314	F9	C406	B8	C613	B5	C6D8	B5	C837	A11	H/SW+TP	J10	L808	A12	Q908	F11	R351	F8	R578	K4	R653	D7	R855	A9	X301	F8
C315	D8	C407	A12	C614	B6	C6D9	B6	C838	A11	IC201	B3	L809	A11	Q909	F11	R352	D8	R579	J4	R654	C8	R856	A9	X302	F8
C316	D8	C408	B8	C615	C6	C6E3	D6	C839	A3	IC351	I9	L901	E11	Q910	F11	R353	D8	R580	I3	R655	C8	R857	B9	X501	J3
C317	E8	C409	B11	C616	B7	C6E5	E3	C840	A11	IC401	B7	L902	E11	Q911	I11	R354	D9	R581	J5	R656	C7	R858	B9	X502	J3
C318	F8	C410	B11	C617	B6	C6H1	B4	C850	D10	IC402	B12	L903	E11	Q912	J11	R355	E8	R582	J5	R657	C7	R863	A9	X601	C6
C319	G8	C411	B11	C618	B6	C6H2	B4	C851	C9	IC503	K2	L904	E11	Q913	I11	R356	H10	R583	K3	R658	C7	R864	A9	X751	L8
C320	G8	C412	B12	C619	C6	C6H3	B5	C852	C9	IC504	J3	L905	E12	Q914	H11	R365	E7	R584	I3	R660	D6	R867	C10	ZD501	J1
C321	E8	C413	A12	C622	C6	C6H5	D5	C853	B10	IC505	K3	L906	E11	R201	B3	R366	D8	R585	I3	R661	C6	R868	D10	ZD502	J1
C322	F7	C414	B11	C623	C5	C6H6	B4	C856	C9	IC5F1	D2	L907	D12	R202	B3	R368	E8	R588	I4	R670	E5	R875	D10	ZD503	K1
C323	G10	C415	B11	C624	D5	C6H7	D5	C870	D10	IC601	C5	L908	I11	R203	B3	R375	E8	R592	G1	R671	D4	R876	D10	ZD504	L1
C324	G9	C418	B8	C626	D5	C6H8	C5	C871	B9	IC603	E5	L909	J11	R204	A5	R351	J9	R593	G1	R682	B4	R881	B9	ZD505	I1
C325	E7	C501	K3	C627	D5	C6H9	B5	C884	D11	IC604	D3	L910	F12	R205	B3	R352	I9	R583	I4	R683	B4	R882	D10	ZD506	I1
C326	F10	C502	K2	C628	D5	C702	K11	C885	C10	IC605	C6	L914	K11	R206	B3	R353	I9	R584	J5	R684	B4	R891	D11	ZD801	A11
C327	F8	C503	I2	C629	D4	C703	L11	C886	B9	IC607	C7	L915	K11	R207	B3	R354	I8	R5C5	L7	R685	A5	R892	A12	ZD802	B11
C328	D9	C504	I2	C631	D4	C704	K9	C887	C9	IC751	L8	L916	I11	R208	A3	R355	I9	R5C6	B1	R686	B5	R893	D11	ZD803	C11
C329	F8	C505	K3	C632	D4	C706	L10	C888	D10	IC7V1	K10	L917	A11	R209	B3	R403	B7	R5C7	A1	R687	B5	R899	A10	ZD901	D11
C330	F8	C506	K3	C633	D4	C707	L10	C889	D10	IC802	B9	L918	A8	R211	A3	R404	B7	R5C9	L4	R688	A5	R901	F11	ZD902	E11
C331	G9	C507	I2	C634	D4	C709	L10	C890	A11	IC903	B7	L924	C7	R212	A3	R405	B11	R5D1	G2	R690	C6	R902	F11	ZD903	F11
C332	F9	C508	J3	C635	D4	C710	K11	C891	D10	J303	E8	L925	C7	R213	A3	R406	B11	R5D2	G2	R691	B5	R903	D10	ZD905	G11
C333	F8	C509	I3	C636	C3	C712	L8	C892	B8	J333	G9	L926	C7	R214	A4	R407	A12	R5D3	G2	R694	D6	R904	I11	ZD906	G11
C334	F8	C510	J4	C637	D4	C713	L8	C902	J11	J602	E2	L927	C11	R216	A4	R408	A12	R5D4	G2	R696	C5	R905	J11	ZD907	F11
C335	G9	C511	I3	C638	D4	C714	L8	C907	I11	J603	E2	L928	J3	R217	A4	R409	B12	R5D5	G2	R697	C6	R906	D12	ZD908	F11
C336	F9	C512	I3	C639	C4	C715	L8	C908	I11	J604	E2	L929	D11	R218	B6	R410	B12	R5D6	G2	R698	C6	R907	E12	ZD909	H11
C337	G9	C513	J4	C640	C4	C716	L8	C909	J11	J701	K10	L930	D12	R219	B6	R411	A12	R5E1	D2	R6A1	C6	R908	A8	ZD910	G11
C338	E9	C514	J3	C641	C3	C717	K9	C910	J11	J702	K10	L931	C12	R220	B4	R412	B12	R5G2	E1	R6A2	E3	R909	A8	ZD911	D12
C339	G9	C515	J3	C642	C3	C718	L9	C911	H11	J803	B9	L932	A8	R221	B4	R413	B12	R5G3	E1	R6F4	B6	R910	A8	ZD912	D12
C340	G9	C516	K2	C643	C3	C719	L9	C912	H12	J804	B9	LD501	F5	R222	B3	R414	B11	R5G4	E1	R705	L10	R913	G11	ZD915	E11
C341	F9	C517	I3	C644	C3	C720	K8	C913	H12	J904	C7	LED501	B1	R226	A3	R415	B11	R5J1	J4	R706	L10	R914	H11	ZD916	E11
C342	E8	C518	I3	C645	E5	C721	K8	C914	E12	J906	F6	MIX	A8	R228	B3	R416	B8	R5K1	G1	R707	K9	R919	H11	ZD917	E11
C343	F8	C519	J8	C648	E5	C722	K8	C915	B12	JK5L1	J1	MS501	K4	R248	A3	R417	B8	R5K2	G1	R708	K8	R920	H12	ZD918	E11
C344	E9	C520	J5	C649	E5	C723	K8	C916	E12	JK902	I12	P3D01	E9	R262	B4	R418	B8	R5K3	H1	R709	K8	R921	H11	ZD919	E11
C345	F9	C522	I3	C650	E4	C726	L8	C917	D12	JK903	B12	P3D02	G9	R263	A3	R419	B8	R5K4	I1	R710	K8	R922	C12	ZD920	E11
C346	D9	C523	H2	C651	D6	C727	L8	C918	E12	JK904	D12	P3D03	A8	R270	B4	R422	C8	R5K5	F1	R711	K8	R933	H11	ZD921	G11
C347	F9	C524	I2	C652	C5	C728	L7	C919	D12	L201	A3	PM1	D6	R301	E9	R423	C7	R5K9	I1	R712	K8	R934	J11	ZD922	E11
C348	D8	C525	J8	C657	B5	C729	L8	C920	E12	L202	A4	PM15	C3	R302	D8	R424	C7	R5R7	E2	R713	K8	R935	B12	ZD923	E11
C349	G8	C526	J8	C660	D6	C732	L8	C921	E12	L203	B4	PM2	D5	R303	J6	R425	C7	R5R8	D1	R714	K10	R936	B12	ZD924	G11
C350	F9	C534	L7	C661	F5	C751	K12	C922	E11	L205	A3	PM4	D6	R304	J6	R501	K2	R5W1	H2	R715	K11	R937	B12	ZD925	G11
C351	J6	C535	A7	C662	E2	C752	L12	C923	E11	L206	A5	PM5	D6	R305	F10	R502	K2	R5W2	H2	R716	L10	R938	B12	ZD926	H11
C352	E9	C543	J7	C664	C2	C7M3	L12	C924	E11	L301	D8	PM6	D6	R306	F10	R504	K3	R5W3	H2	R717	L9	R940	C12		
C353	E7	C544	J8	C666	D7	C7M4	L11	C925	E11	L303	F9	PMC01	J8	R307	F10	R505	J8	R5W4	I3	R718	L9	R941	C12		
C355	E8	C545	J8	C667	C8	C7M5	L12	C926	K11	L304	G8	PMX01	L5	R308	E9	R506	I2	R5W5	I3	R7M1	L12	R950	B8		
C356	D8	C546	J9	C668	C7	C7M6	L11	C927	K11	L305	F7	Q201	A4	R309	E9	R507	I3	R5W6	H3	R7M2	L11	R951	B7		
C357	D8	C547	I8	C669	C8	C751	K10	C928	F11	L306	E7	Q202	B6	R310	F10	R508	I2	R601	C4	R7M4	L11	R952	B6		
C358	E6	C551	J7	C670	C8	C752	K11	C930	D12	L307	D9	Q203	B3	R311	E9	R509	J3	R602	B4	R7M5	L11	R953	A7		
C359	D9	C552	B2	C671	C8	C753	L10	C936	K11	L308	G10	Q204	B3	R312	E9	R510	J4	R604	B4	R7M6	L12	R954	A7		
C360	D9	C553	I3	C673	E2	C7V1	J9	C937	K11	L3S1	I10	Q206	A3	R313	H10	R512	J8	R605	B5	R751	K10	R955	F7		
C361	D9	C554	I3	C674	C4	C7V2	J10	C941	C11	L503	I2	Q302	F10	R314	H10	R517	K4	R606	B5	R7V1	K10	R956	A8		

2. MAIN P.C.BOARD (BOTTOM SIDE)

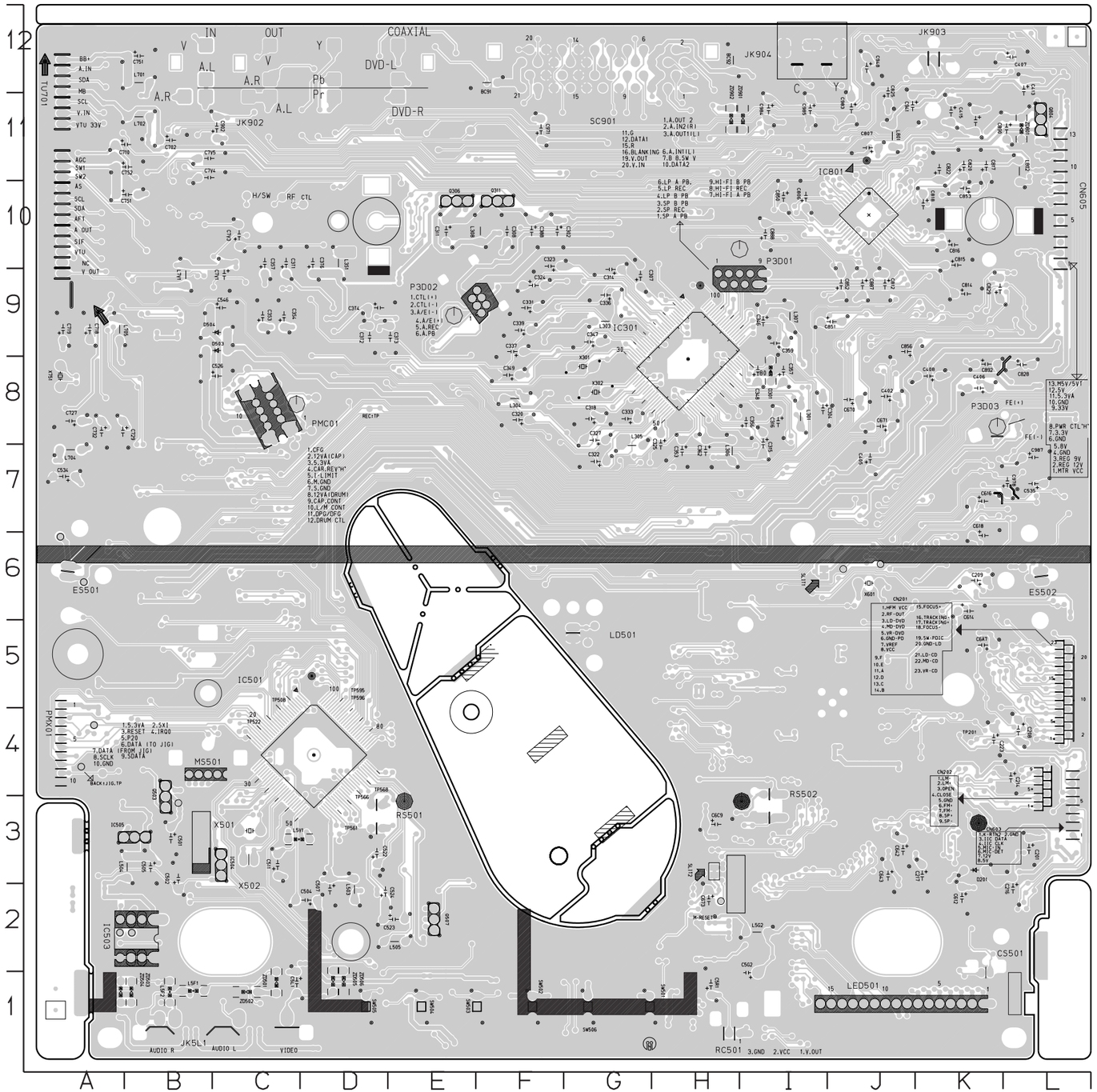

LOCATION GUIDE

BACK±JIG.TP	A4
BACK±UP.TP	B3
CLK±TP	B2
DATA±TP	A2
IC301	H8
IC501	D4
IC801	J10
JIG601	J6
JIG602	J6
REC±TP	D8
RESET.TP	H2
SLIT1	I6
SLIT2	H3
T-UP.TP	A6
T-UP1.TP	A6
TP201	K4
TP522	C4
TP561	D3
TP566	D4
TP568	D4
TP595	D5
TP596	D5
TW1	C5
VCR.RESET.TP	A4

3. POWER P.C.BOARD

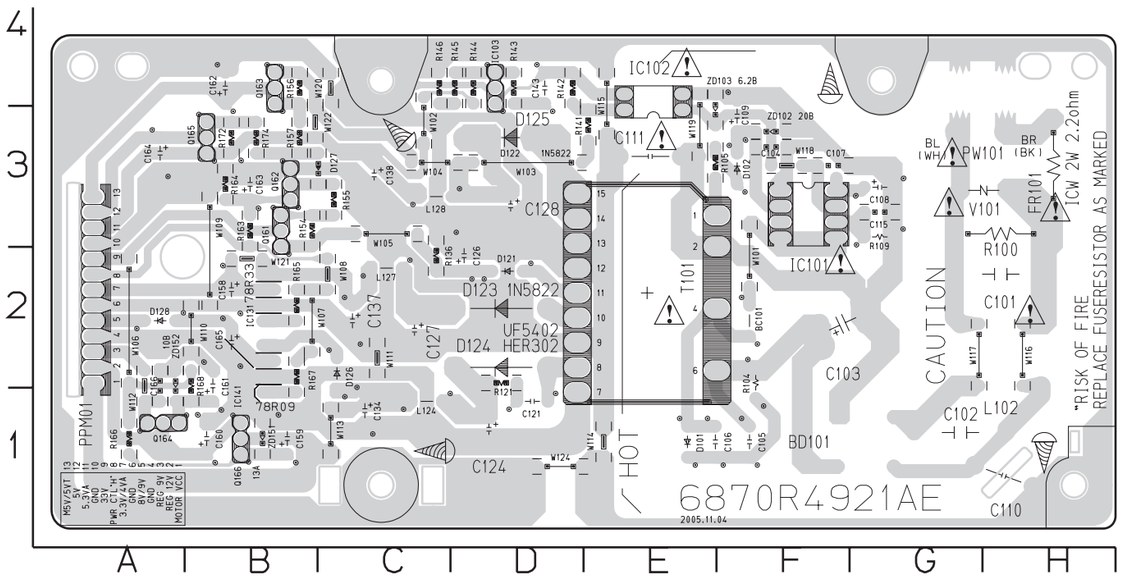

NOTES) ⚠ Warning
Parts that are shaded are critical
With respect to risk of fire or
electricial shock.

4. KEY P.C.BOARD

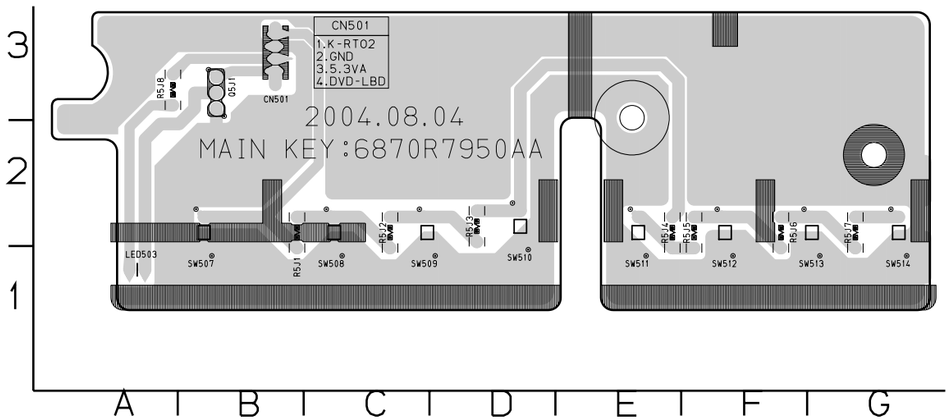

LOCATION GUIDE

CN501	B3
LED503	A1
Q5J1	B3
R5J1	B2
R5J2	C2
R5J3	D2
R5J4	E2
R5J5	F2
R5J6	F2
R5J7	G2
R5J8	A3
SW507	B2
SW508	C2
SW509	C2
SW510	D2
SW511	E2
SW512	F2
SW513	G2
SW514	G2

DVD PART
ELECTRICAL TROUBLESHOOTING GUIDE

1. POWER CHECK FLOW

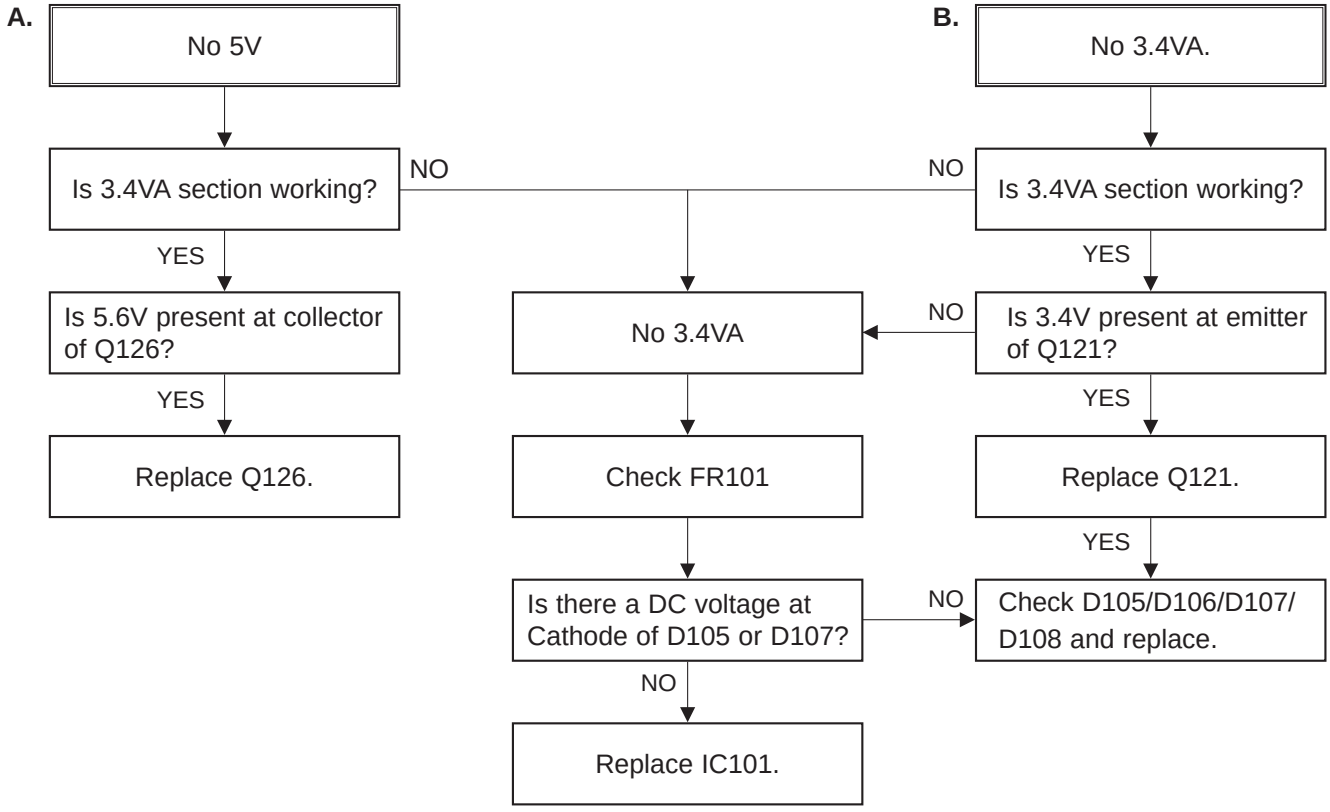

2. SYSTEM OPERATION FLOW

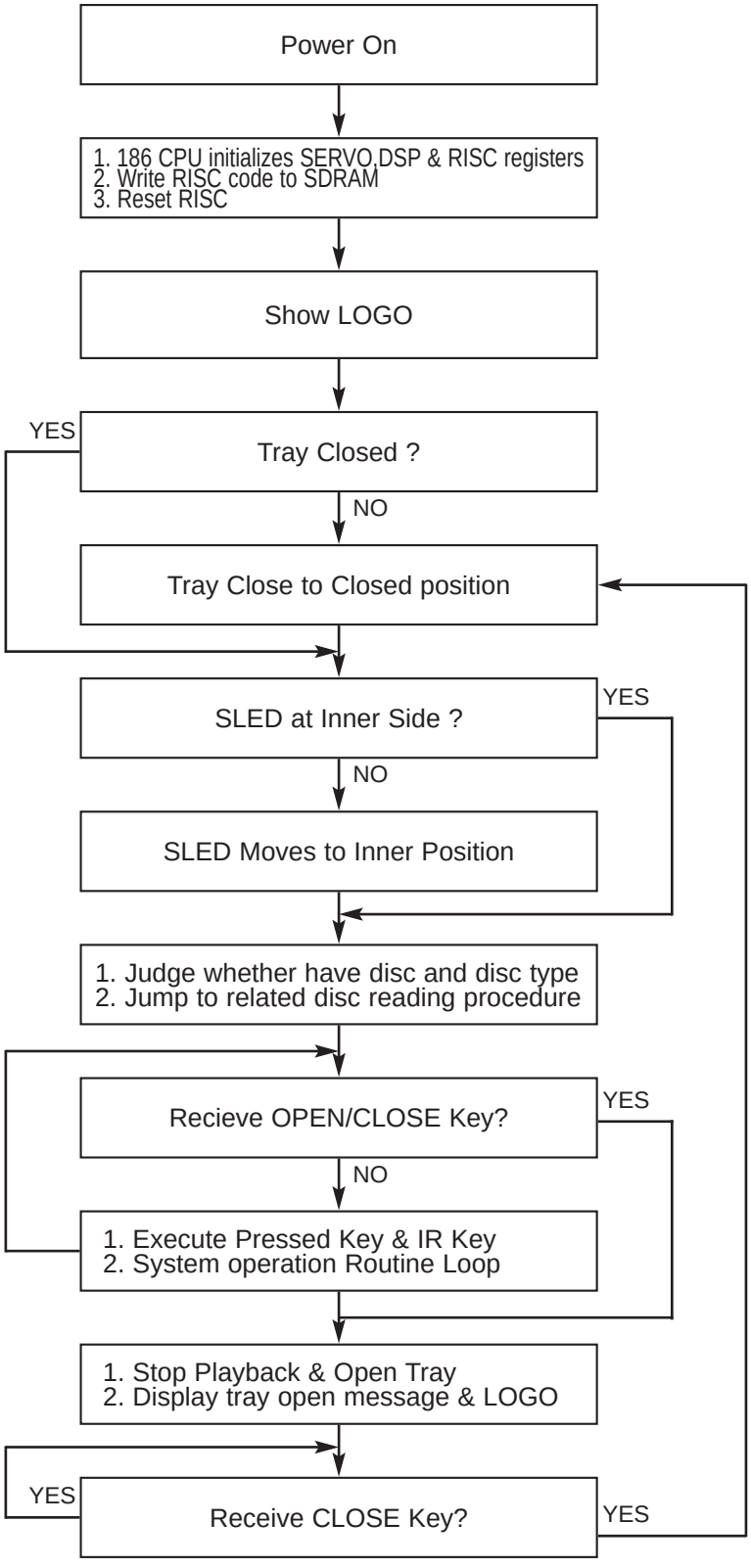

3. Test & debug flow

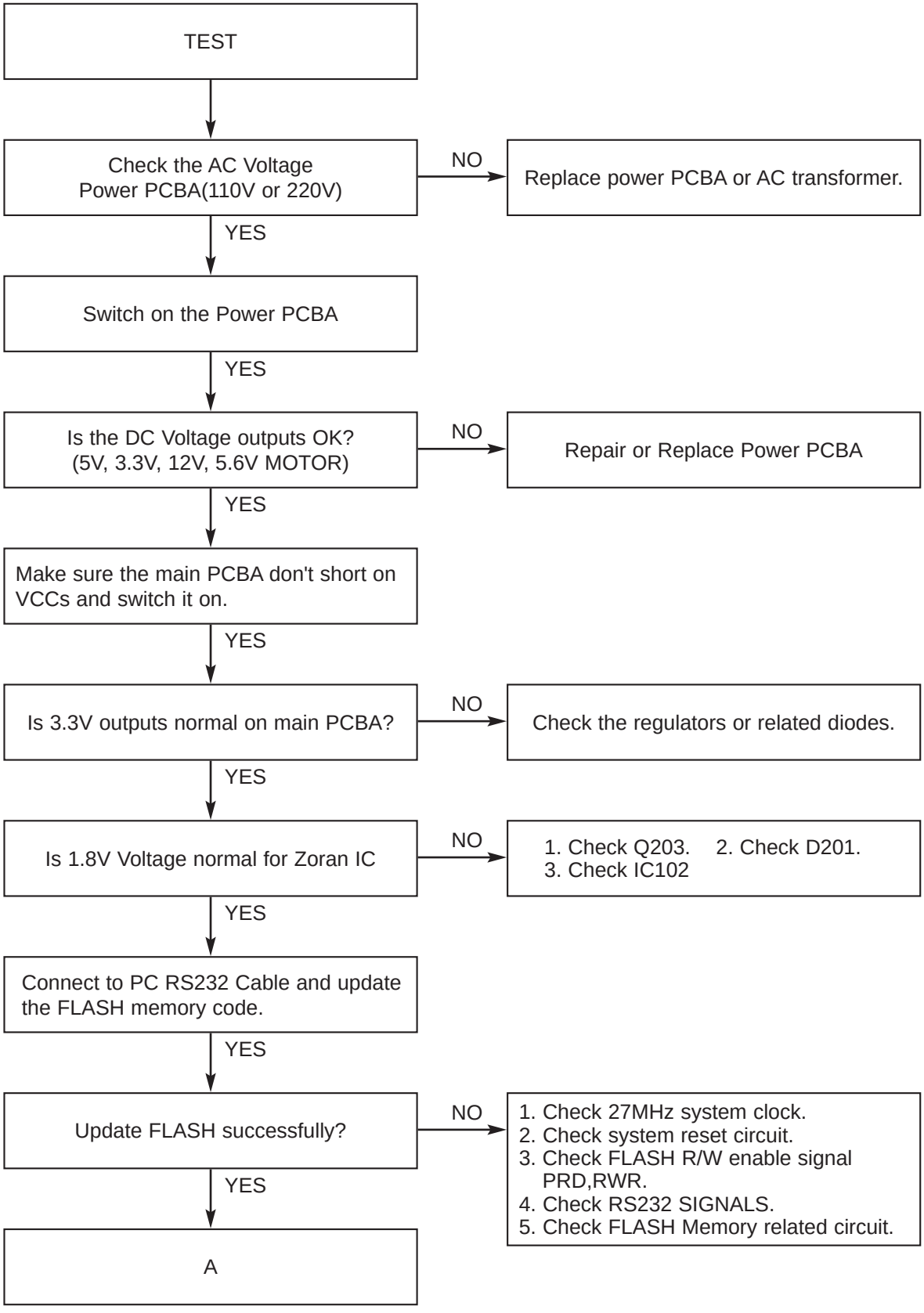

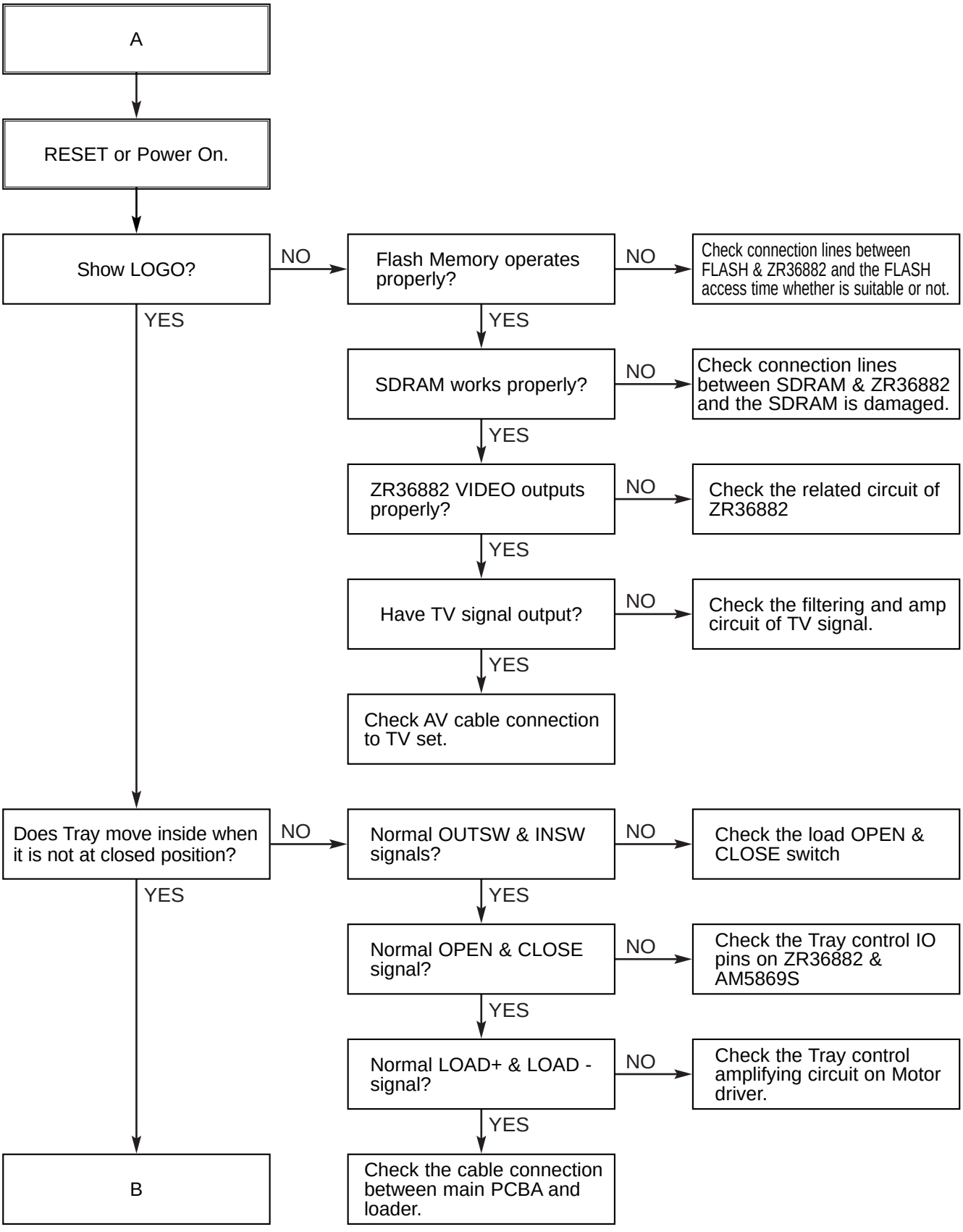
A
RESET or Power On.
Show LOGO?
NO
Flash Memory operates properly?
NO
Check connection lines between FLASH & ZR36882 and the FLASH access time whether is suitable or not.
YES
YES
SDRAM works properly?
NO
Check connection lines between SDRAM & ZR36882 and the SDRAM is damaged.
YES
ZR36882 VIDEO outputs properly?
NO
Check the related circuit of ZR36882
YES
Have TV signal output?
NO
Check the filtering and amp circuit of TV signal.
YES
Check AV cable connection to TV set.
YES
Does Tray move inside when it is not at closed position?
NO
Normal OUTSW & INSW signals?
NO
Check the load OPEN & CLOSE switch
YES
YES
Normal OPEN & CLOSE signal?
NO
Check the Tray control IO pins on ZR36882 & AM5869S
YES
Normal LOAD+ & LOAD - signal?
NO
Check the Tray control amplifying circuit on Motor driver.
YES
B
Check the cable connection between main PCBA and loader.

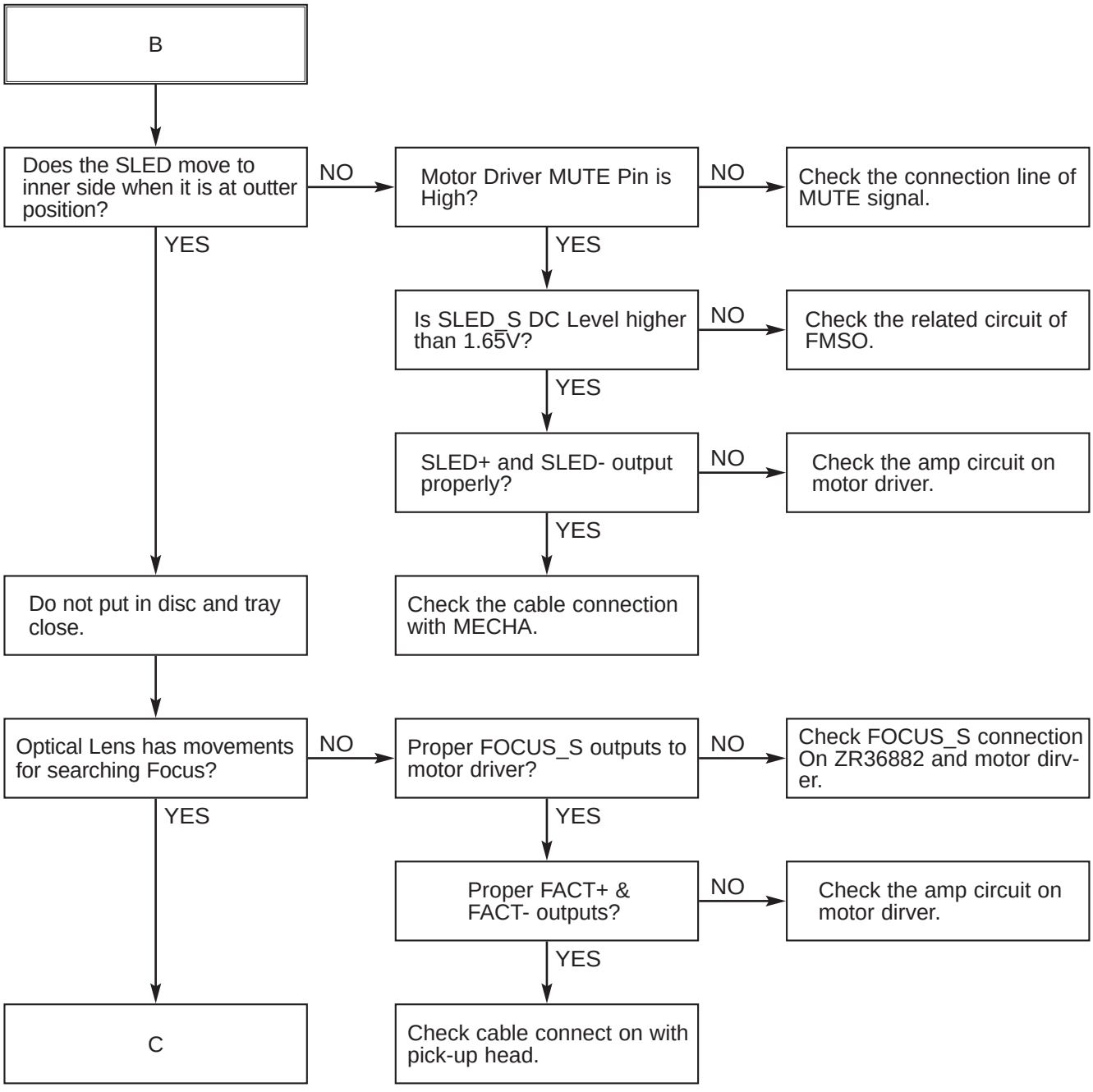
B
Does the SLED move to inner side when it is at outter position?
NO
Motor Driver MUTE Pin is High?
NO
Check the connection line of MUTE signal.
YES
YES
Is SLED_S DC Level higher than 1.65V?
NO
Check the related circuit of FMSO.
YES
SLED+ and SLED- output properly?
NO
Check the amp circuit on motor driver.
YES
Do not put in disc and tray close.
Check the cable connection with MECHA.
Optical Lens has movements for searching Focus?
NO
Proper FOCUS_S outputs to motor driver?
NO
Check FOCUS_S connection On ZR36882 and motor dirv-er.
YES
YES
Proper FACT+ & FACT- outputs?
NO
Check the amp circuit on motor dirver.
YES
C
Check cable connect on with pick-up head.

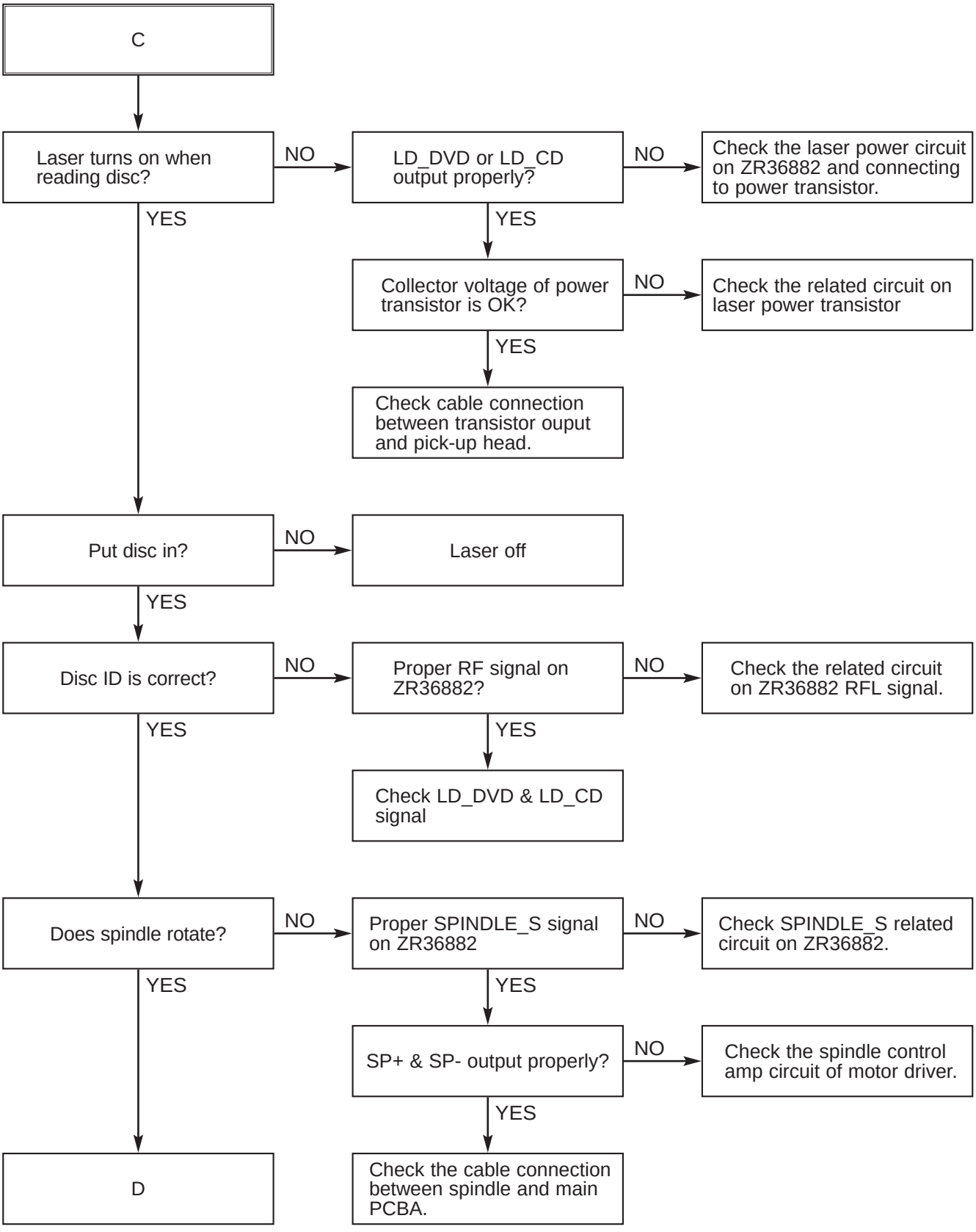
C
Laser turns on when reading disc?
NO
LD_DVD or LD_CD output properly?
NO
Check the laser power circuit on ZR36882 and connecting to power transistor.
YES
YES
Collector voltage of power transistor is OK?
NO
Check the related circuit on laser power transistor
YES
Check cable connection between transistor ouput and pick-up head.
Put disc in?
NO
Laser off
YES
Disc ID is correct?
NO
Proper RF signal on ZR36882?
NO
Check the related circuit on ZR36882 RFL signal.
YES
YES
Check LD_DVD & LD_CD signal
Does spindle rotate?
NO
Proper SPINDLE_S signal on ZR36882
NO
Check SPINDLE_S related circuit on ZR36882.
YES
YES
SP+ & SP- output properly?
NO
Check the spindle control amp circuit of motor driver.
YES
D
Check the cable connection between spindle and main PCBA.

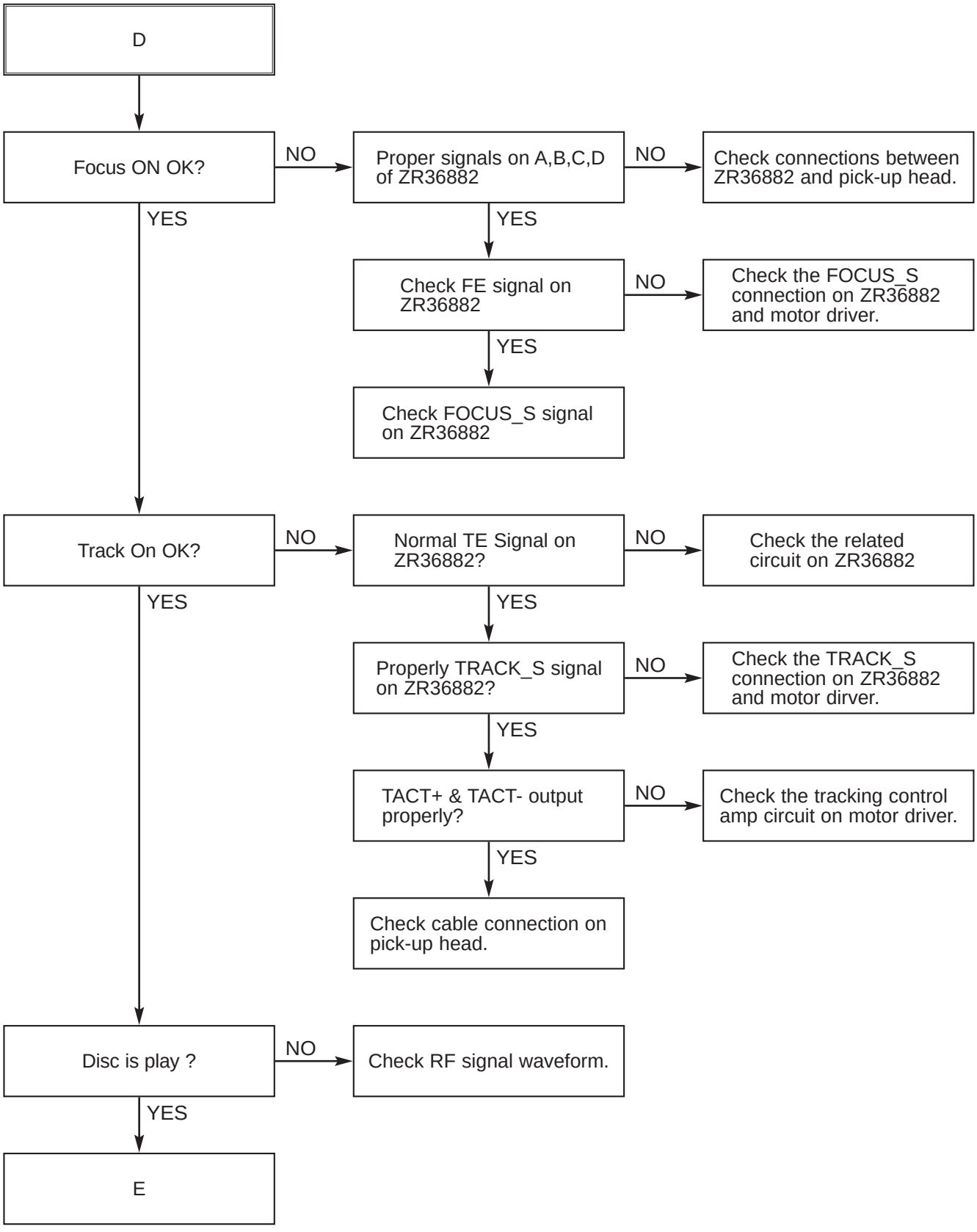
D
Focus ON OK?
NO
Proper signals on A,B,C,D of ZR36882
NO
Check connections between ZR36882 and pick-up head.
YES
YES
Check FE signal on ZR36882
NO
Check the FOCUS_S connection on ZR36882 and motor driver.
YES
Check FOCUS_S signal on ZR36882
Track On OK?
NO
Normal TE Signal on ZR36882?
NO
Check the related circuit on ZR36882
YES
YES
Properly TRACK_S signal on ZR36882?
NO
Check the TRACK_S connection on ZR36882 and motor dirver.
YES
TACT+ & TACT- output properly?
NO
Check the tracking control amp circuit on motor driver.
YES
Check cable connection on pick-up head.
Disc is play ?
NO
Check RF signal waveform.
YES
E

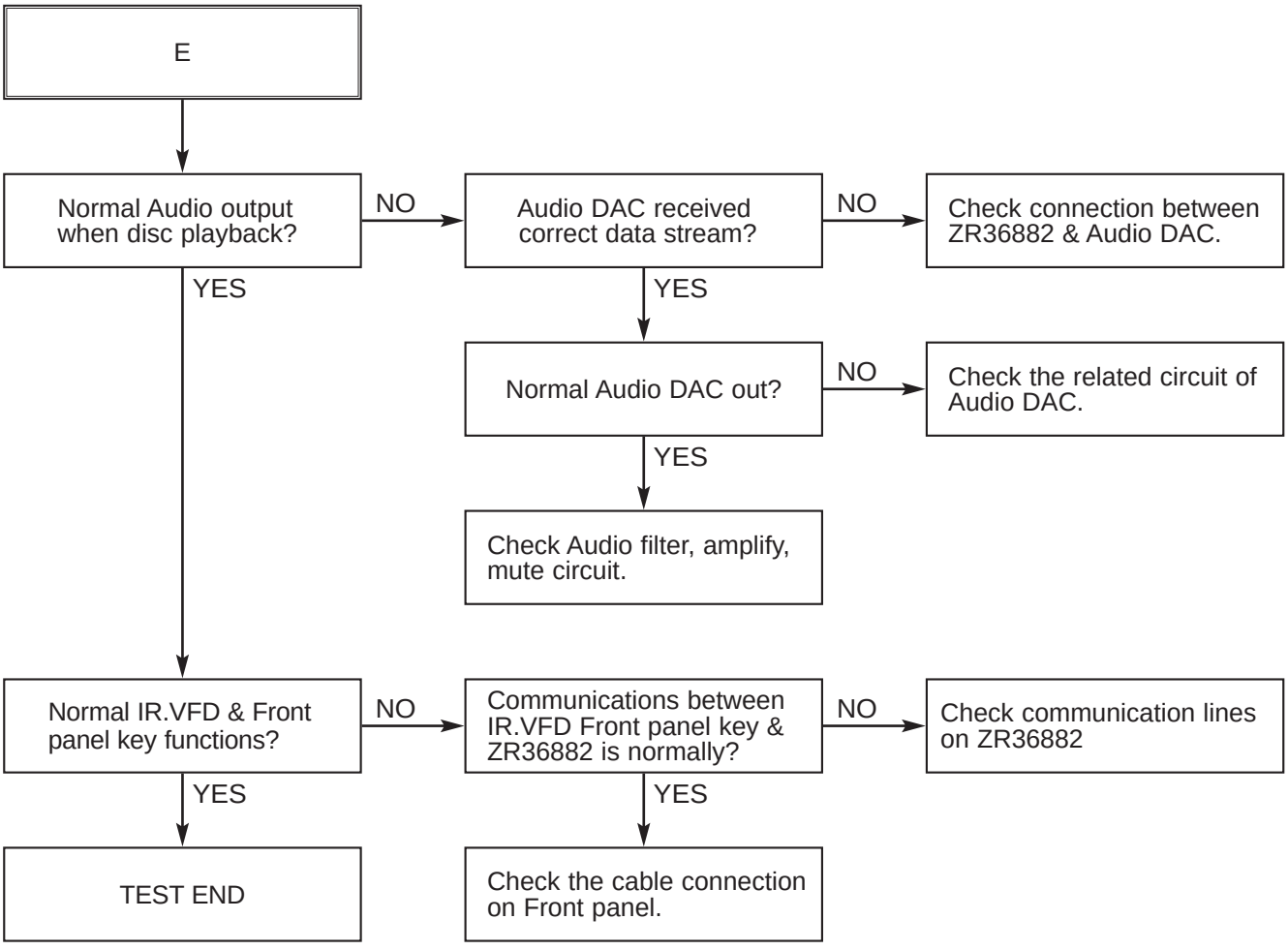
E
Normal Audio output when disc playback?
NO
Audio DAC received correct data stream?
NO
Check connection between ZR36882 & Audio DAC.
YES
YES
Normal Audio DAC out?
NO
Check the related circuit of Audio DAC.
YES
Check Audio filter, amplify, mute circuit.
Normal IR.VFD & Front panel key functions?
NO
Communications between IR.VFD Front panel key & ZR36882 is normally?
NO
Check communication lines on ZR36882
YES
YES
TEST END
Check the cable connection on Front panel.

DETAILS AND WAVEFORMS ON SYSTEM TEST AND DEBUGGING

1. SYSTEM 27MHz CLOCK, RESET SIGNAL

1) ZR36882 main clock is at 27MH(X601)

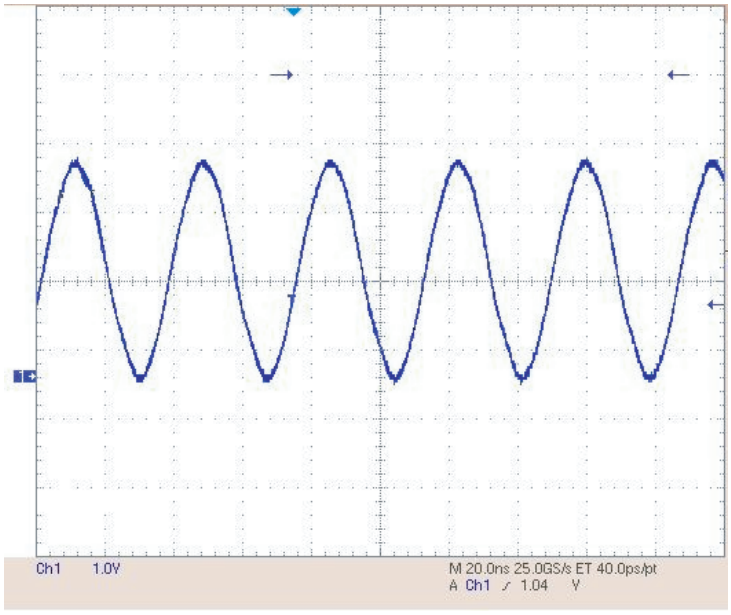

3.1V,27MHz

FIG 1-1

2) ZR36882 reset is low active

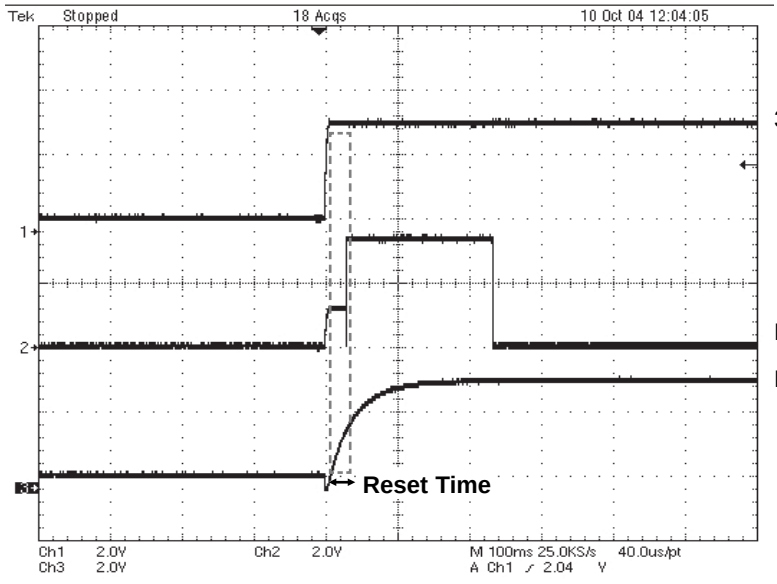

3.3VA

PWR_CTL

RESET

FIG 1-2

2. SDRAM CLOCK

1) SDRAM clock is at 143MHz

CLK=143MHz,Vp-p=3.3V

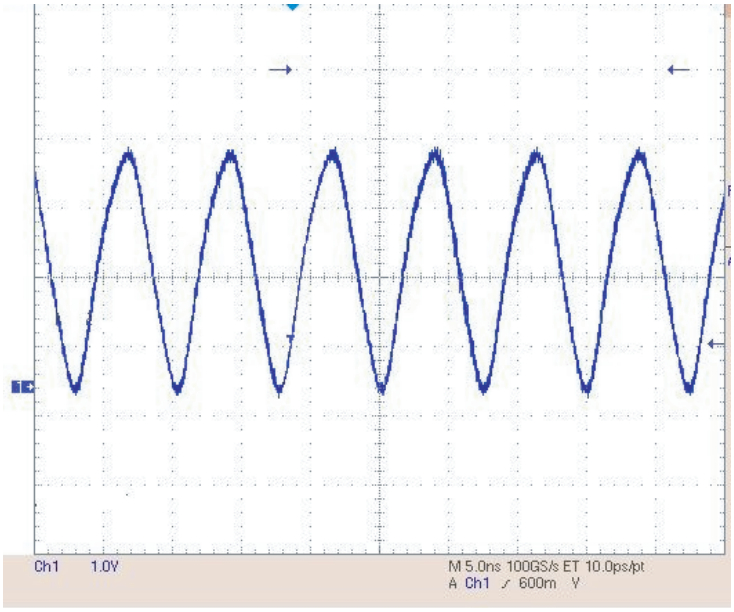

IC603 PIN38

FIG 2-1

3. TRAY OPEN/CLOSE SIGNAL

1) Tray open/close waveform

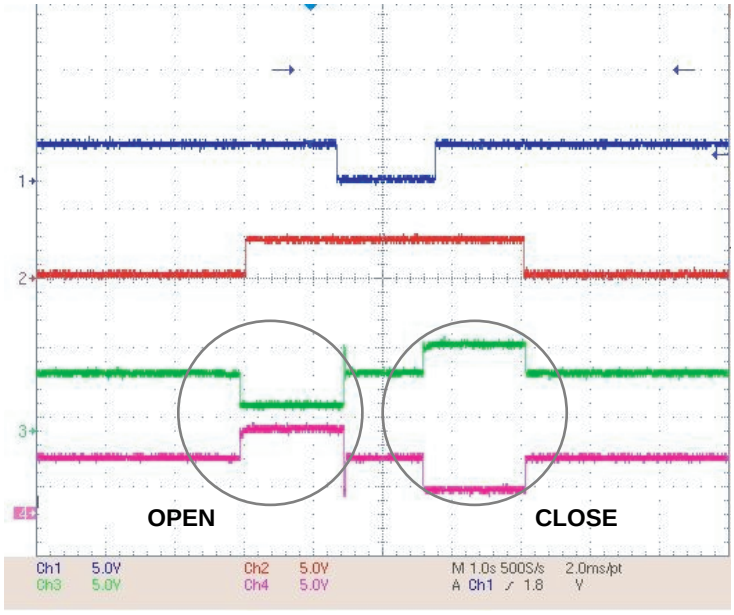

OPEN

CLOSE

LM-

LM+

FIG 3-1

2) Tray open waveform

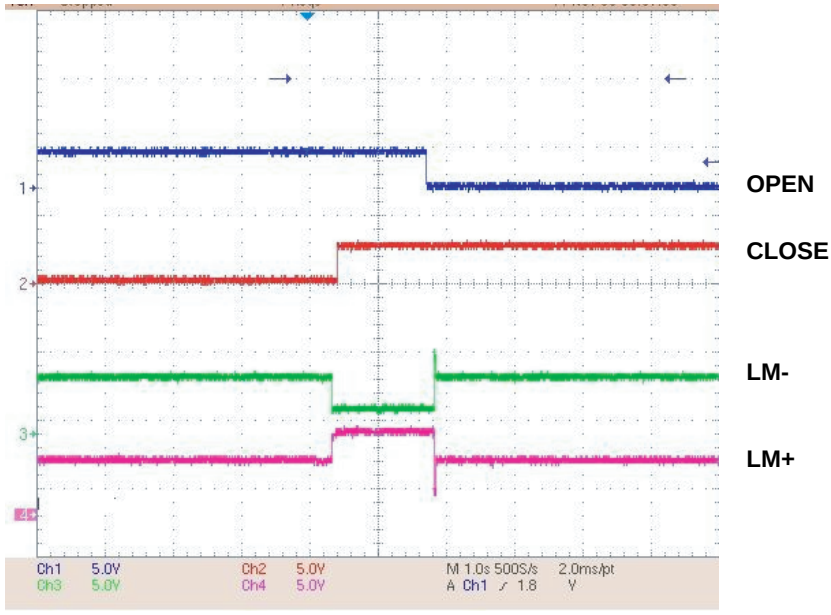

FIG 3-2

3) Tray close waveform

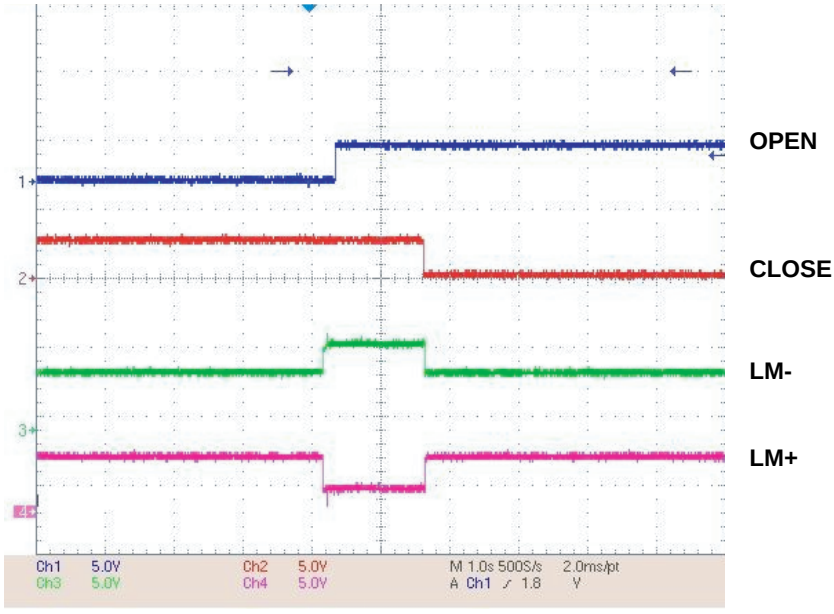

FIG 3-3

4. SLED CONTROL RELATED SIGNAL(NO DISC CONDITION)

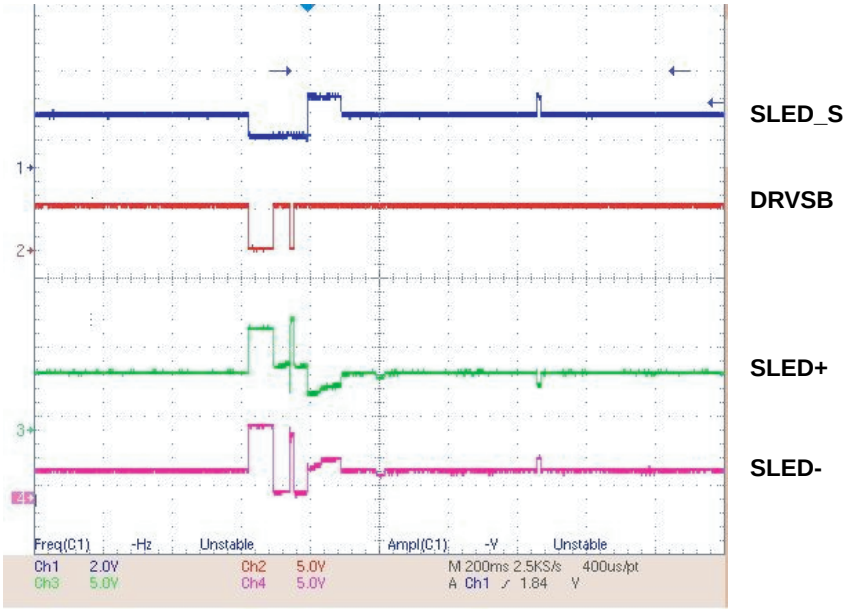

FIG 4-1

5. LENS CONTROL RELATED SIGNAL(NO DISC CONDITION)

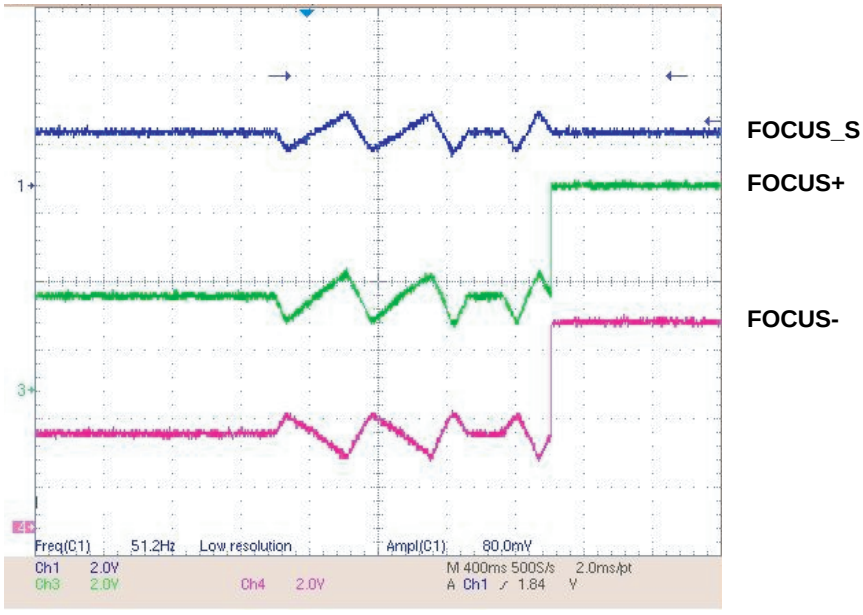

FIG 5-1

6. LASER POWER CONTROL RELATED SIGNAL(NO DISC CONDITION)

DCLK = 128MHz, Vp-p=2.2, Vmax=2.7V

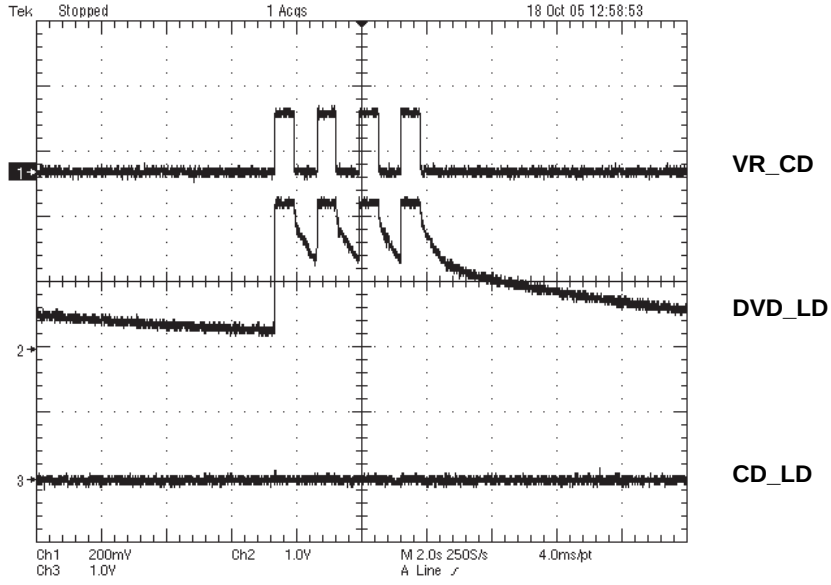

FIG 6-1

7. DISC TYPE JUDGEMENT WAVEFORM

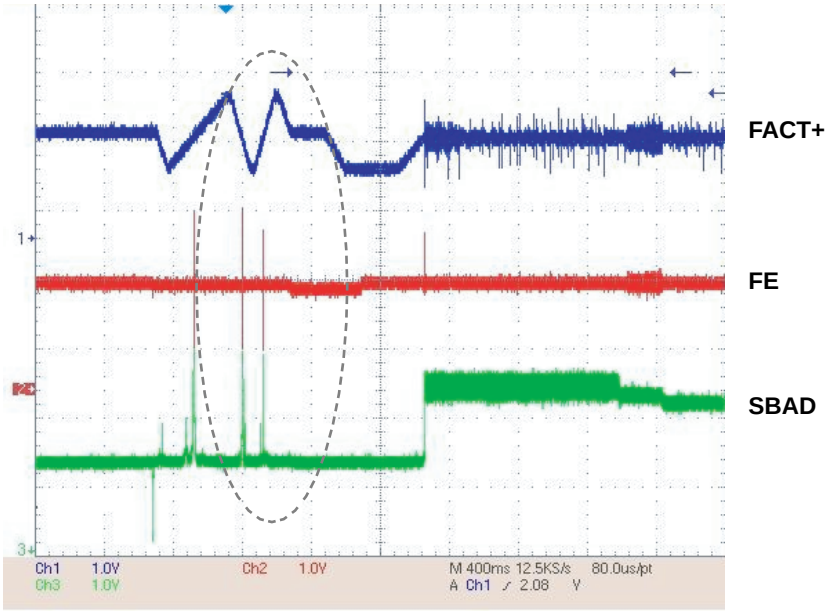

FIG 7-1(DVD)

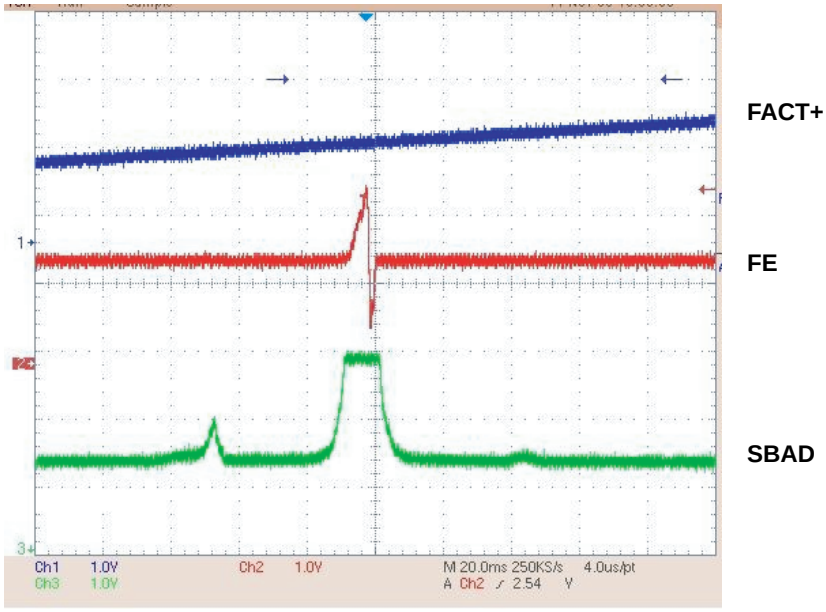

FIG 7-2 (DVD)

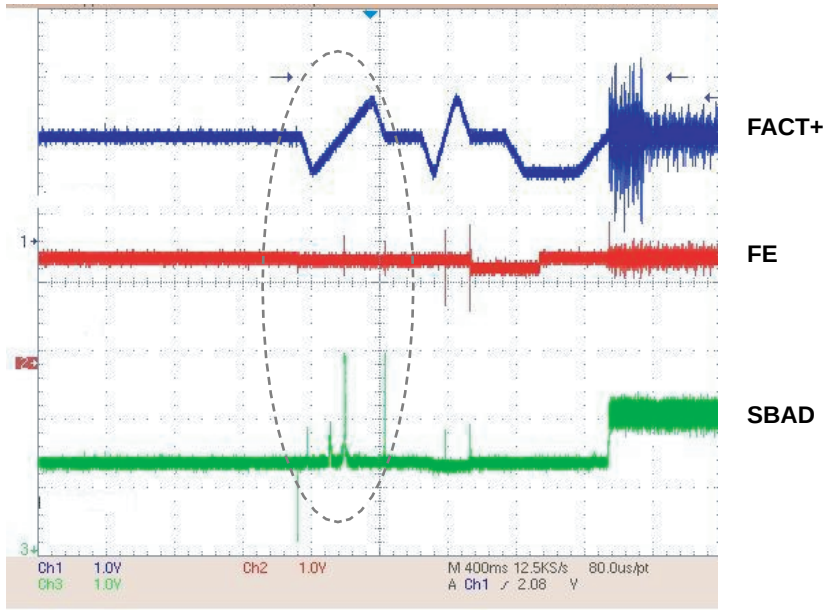

FIG 7-3 (CD)

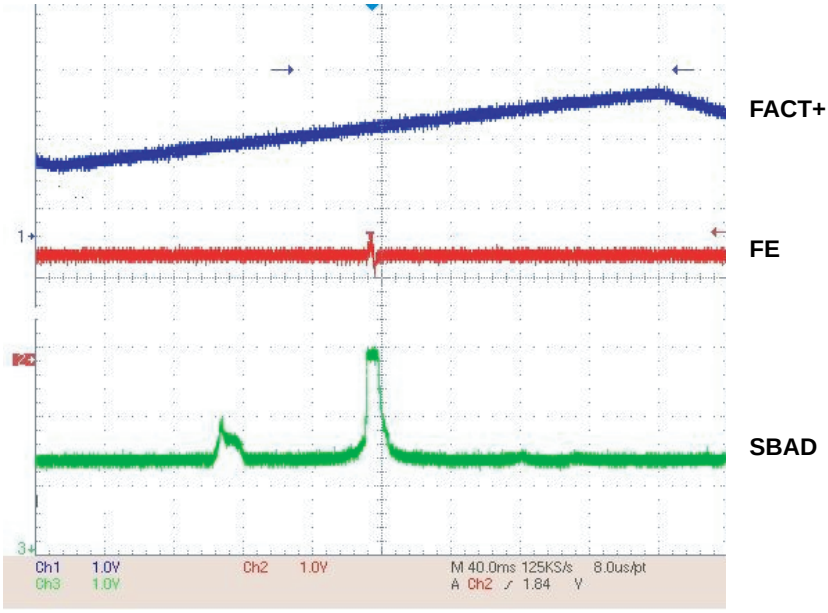

FIG 7-4 (CD)

8. FOCUS ON WAVEFORM

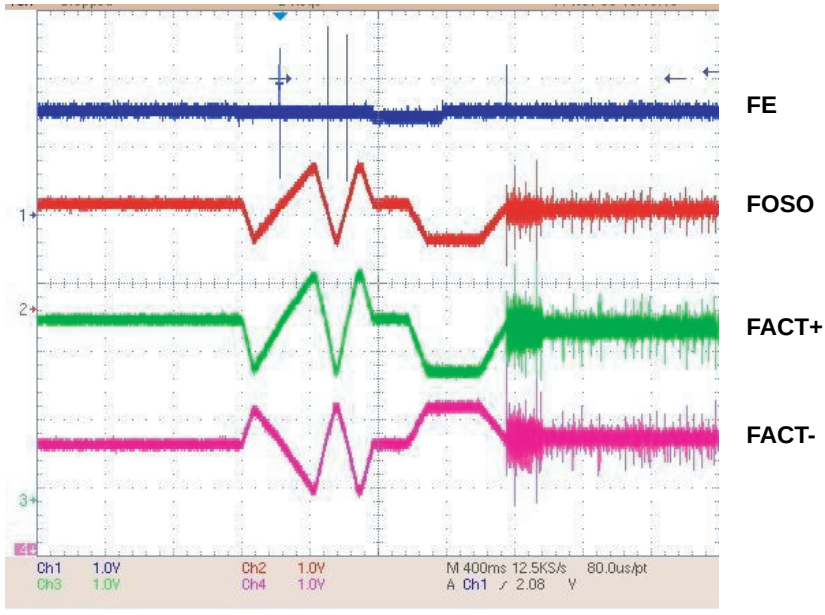

FIG 8-1 (DVD)

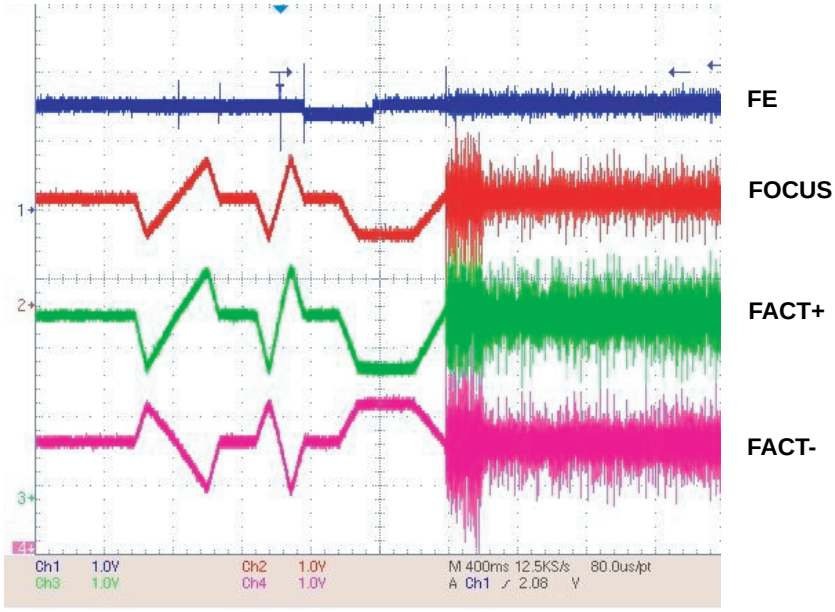

FIG 8-2 (CD)

9. SPINDLE CONTROL WAVEFORM(NO DISC CONDITION)

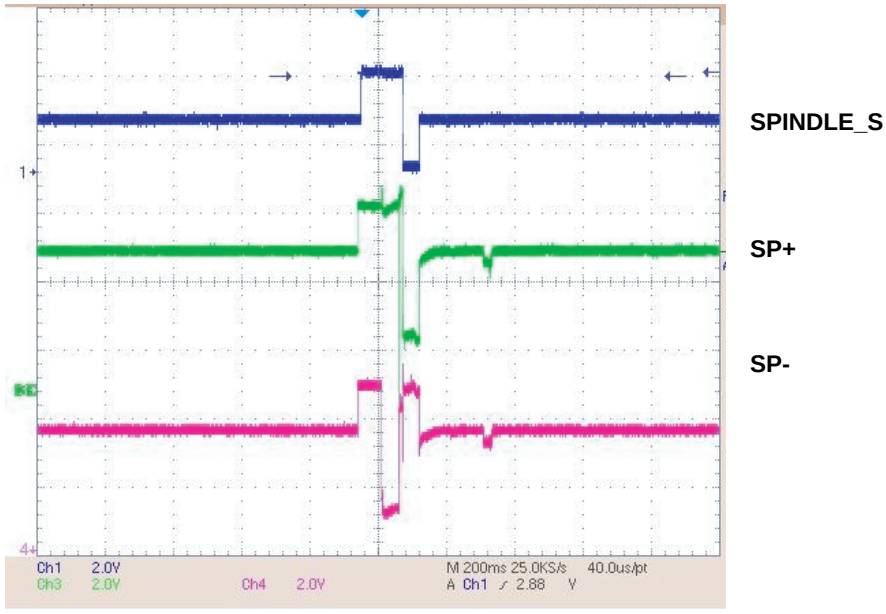

(DVD) FIG 9-1

10. TRACKING CONTROL RELATED SIGNAL(System checking)

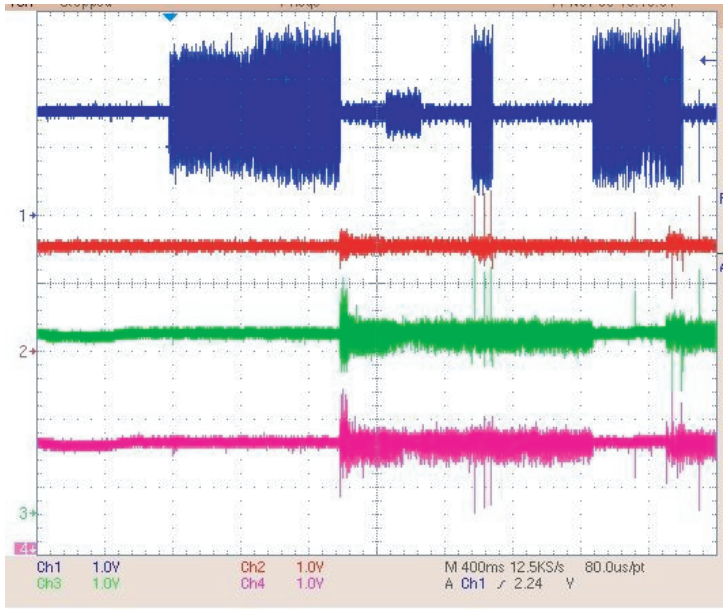

FIG 10-1 (DVD)

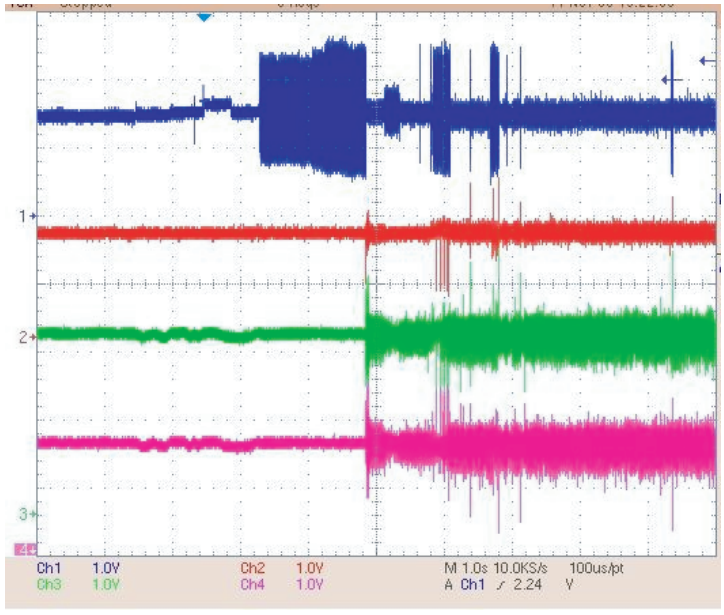

FIG 10-2 (CD)

11. RF WAVEFORM

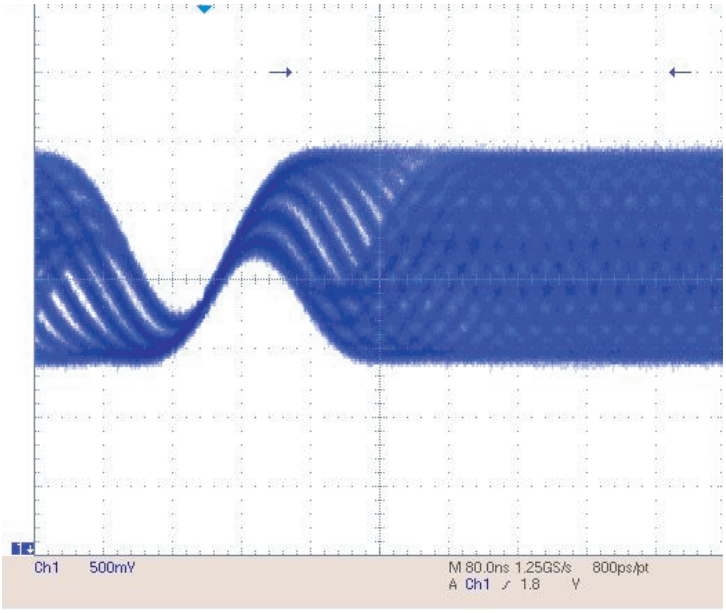

RFO

FIG 11-1

12. ZR36882 AUDIO OPTICAL AND COAXIAL OUTPUT(SPDIF)

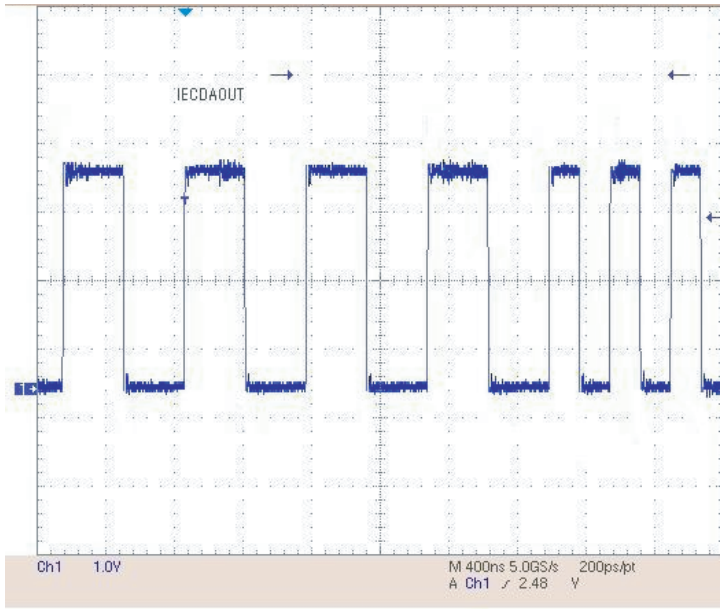

SPDIF

FIG 12-1

13. ZR36882 VIDEO OUTPUT WAVEFORM

1) Full colorbar signal(CVBS)

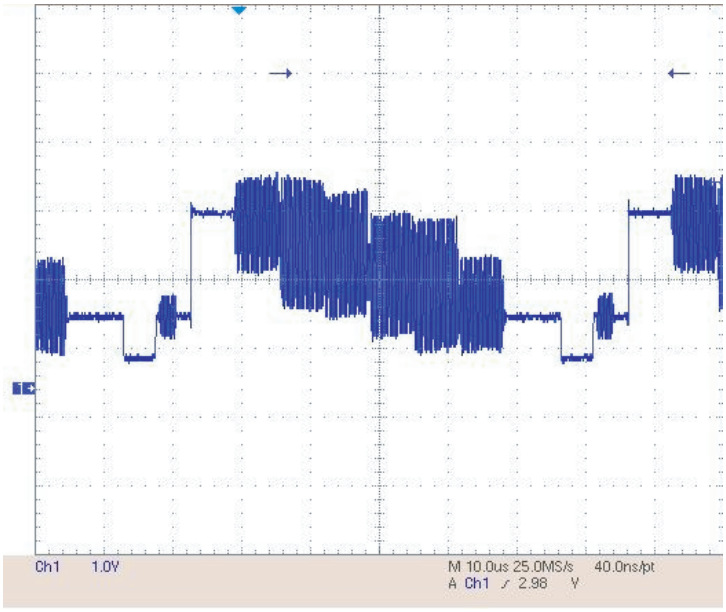

JK702 pin6

FIG 13-1

2) Y

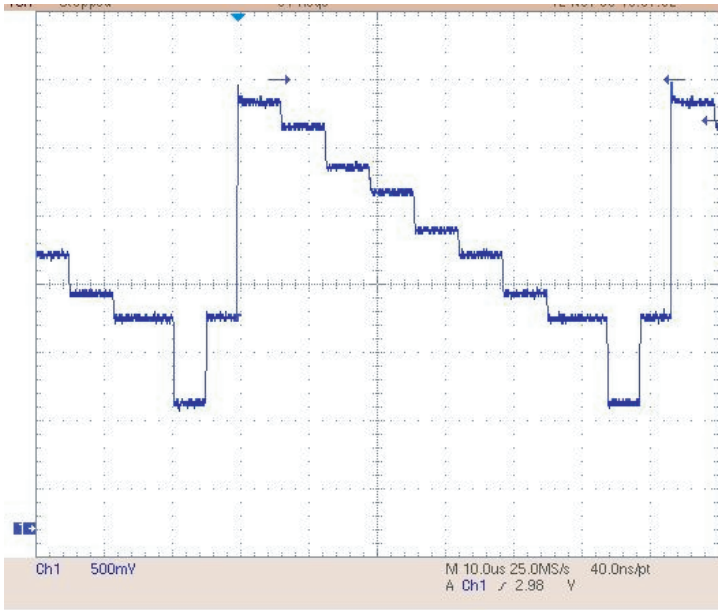

JK702 pin7

FIG 13-2

3) C

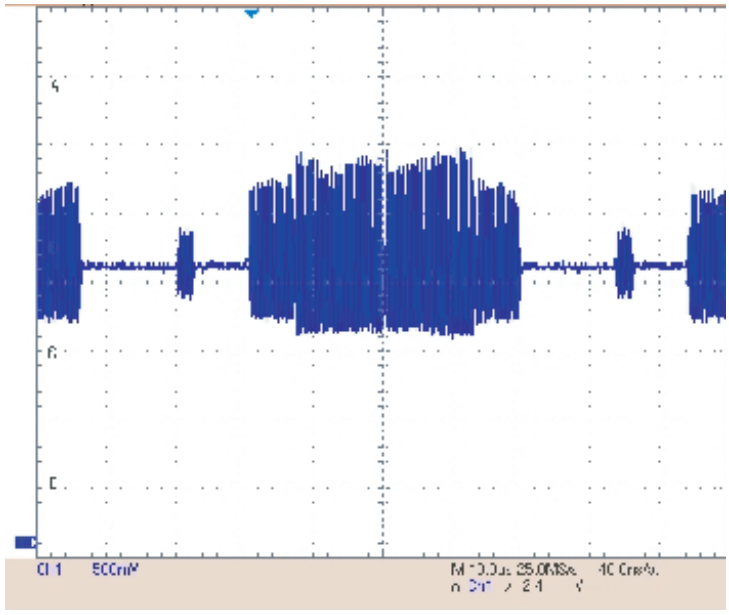

JK702 PIN8

FIG 13-3

14. AUDIO OUTPUT FROM AUDIO DAC

1) AUDIO L/R

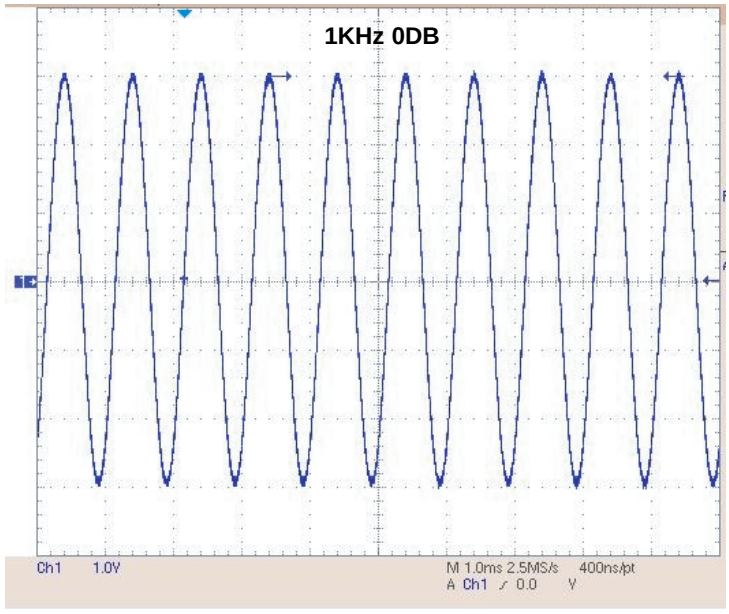

JK702 PIN4,5

FIG 14-1

2) Audio Related Signal

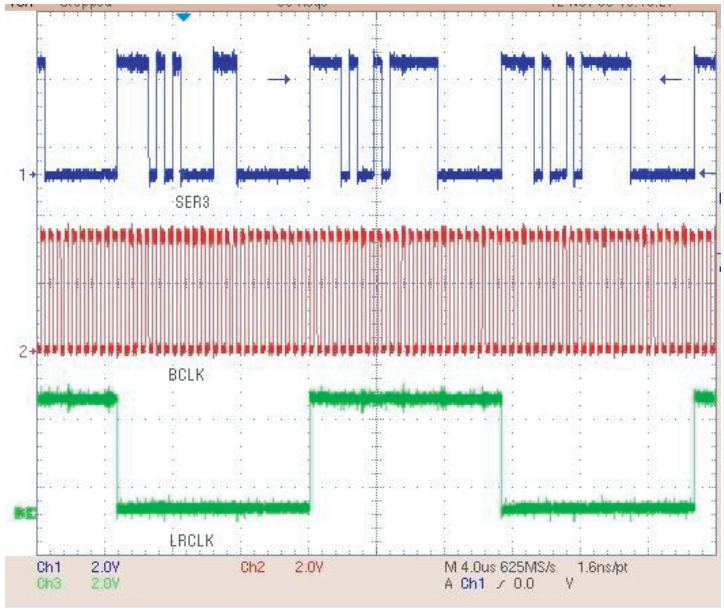

AOUT0

ABCK

ALRCLK

FIG 14-2

BLOCK DIAGRAMS

1. SYSTEM BLOCK DIAGRAM

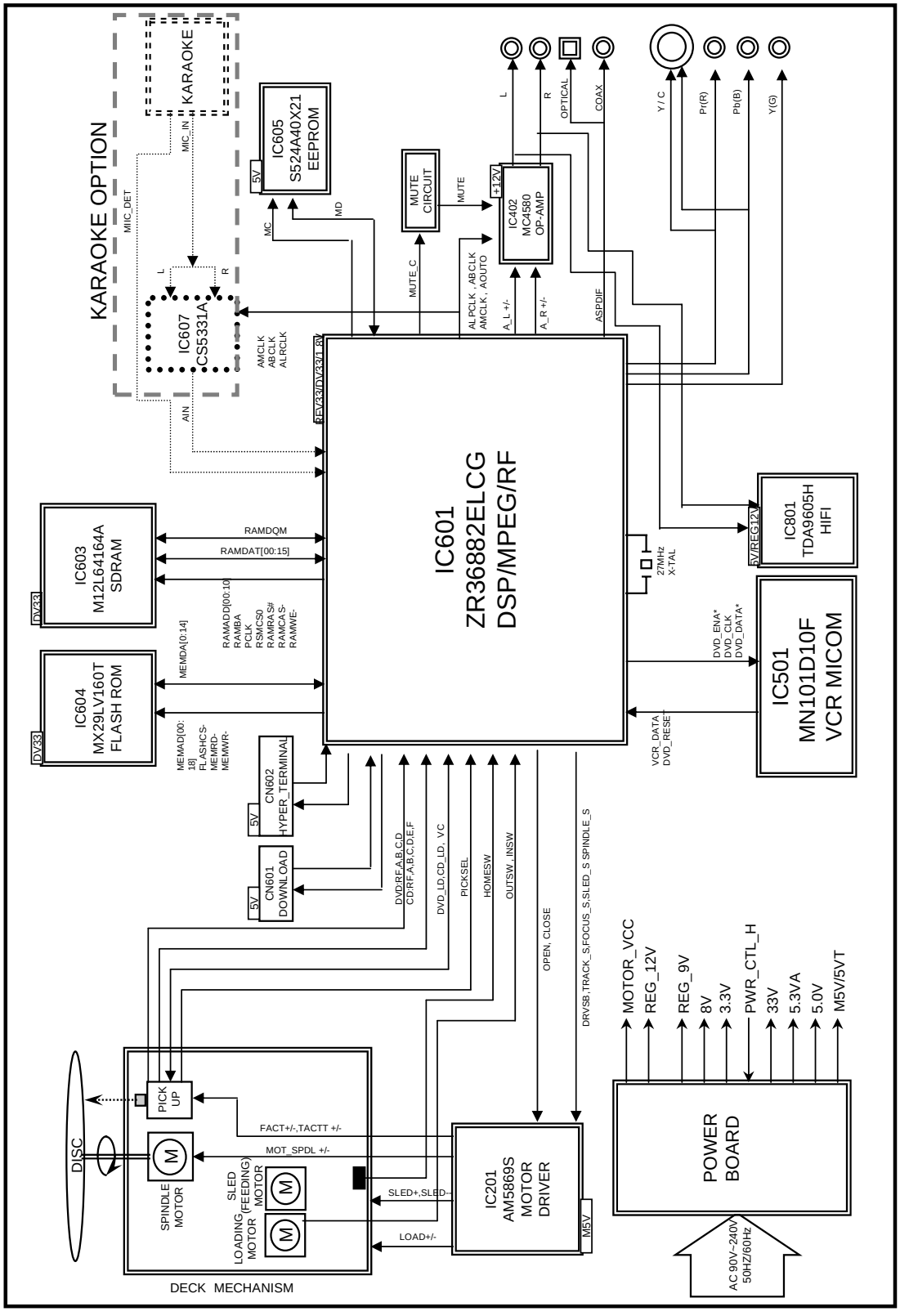

2. SERVO BLOCK DIAGRAM

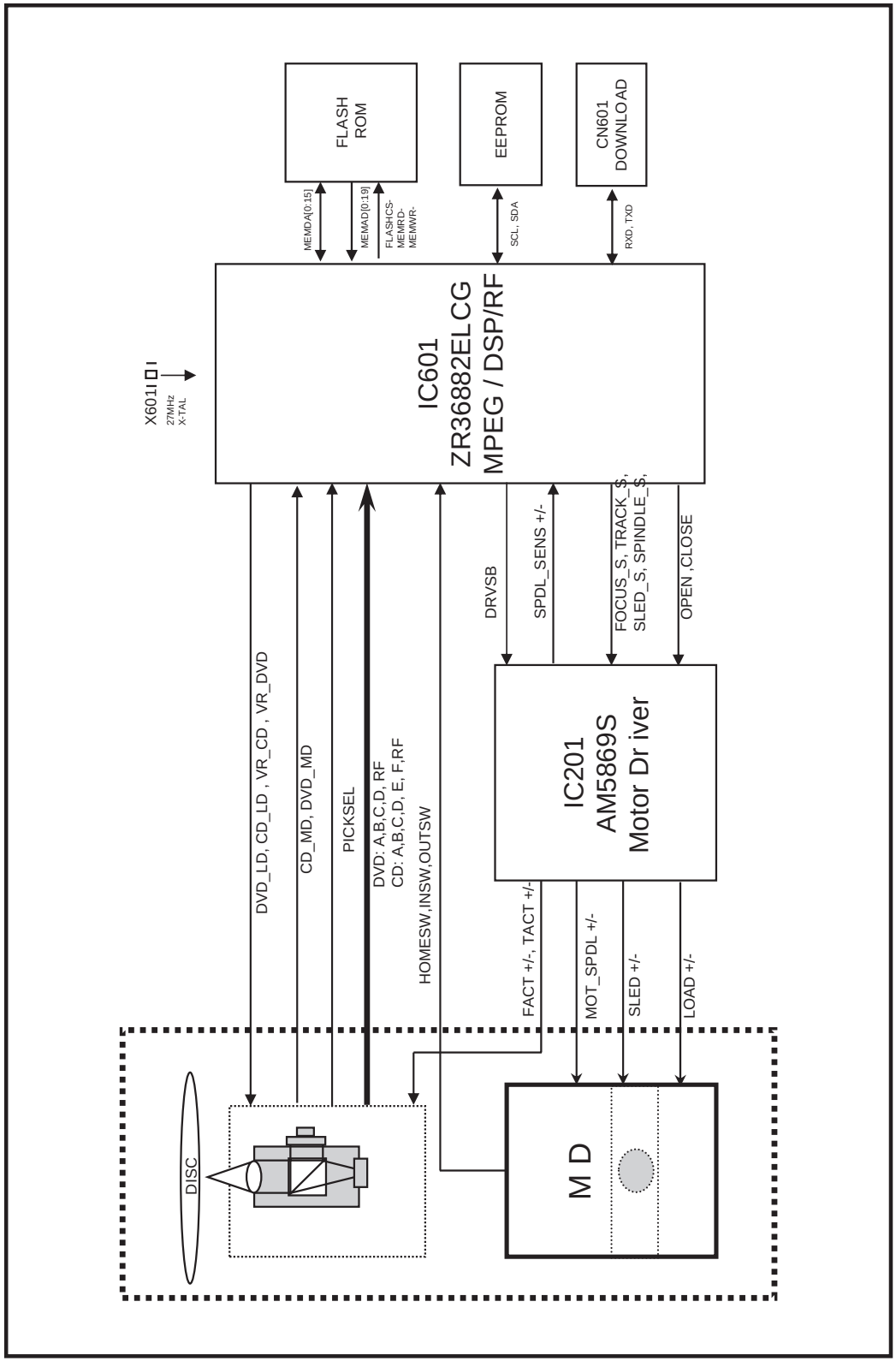

3. AUDIO & VIDEO IN/OUT BLOCK DIAGRAM

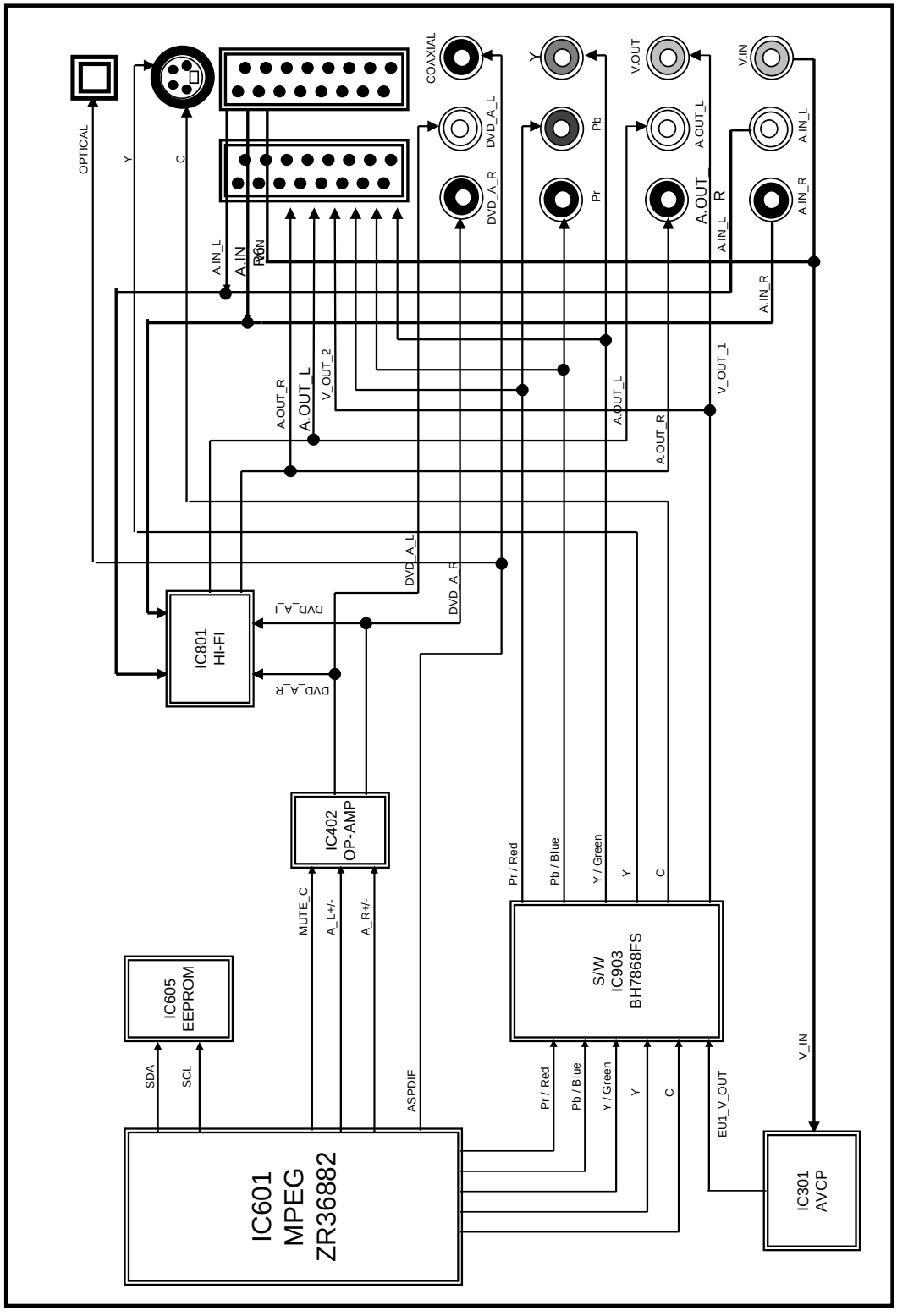

CIRCUIT DIAGRAMS

1. SYSTEM CIRCUIT DIAGRAM

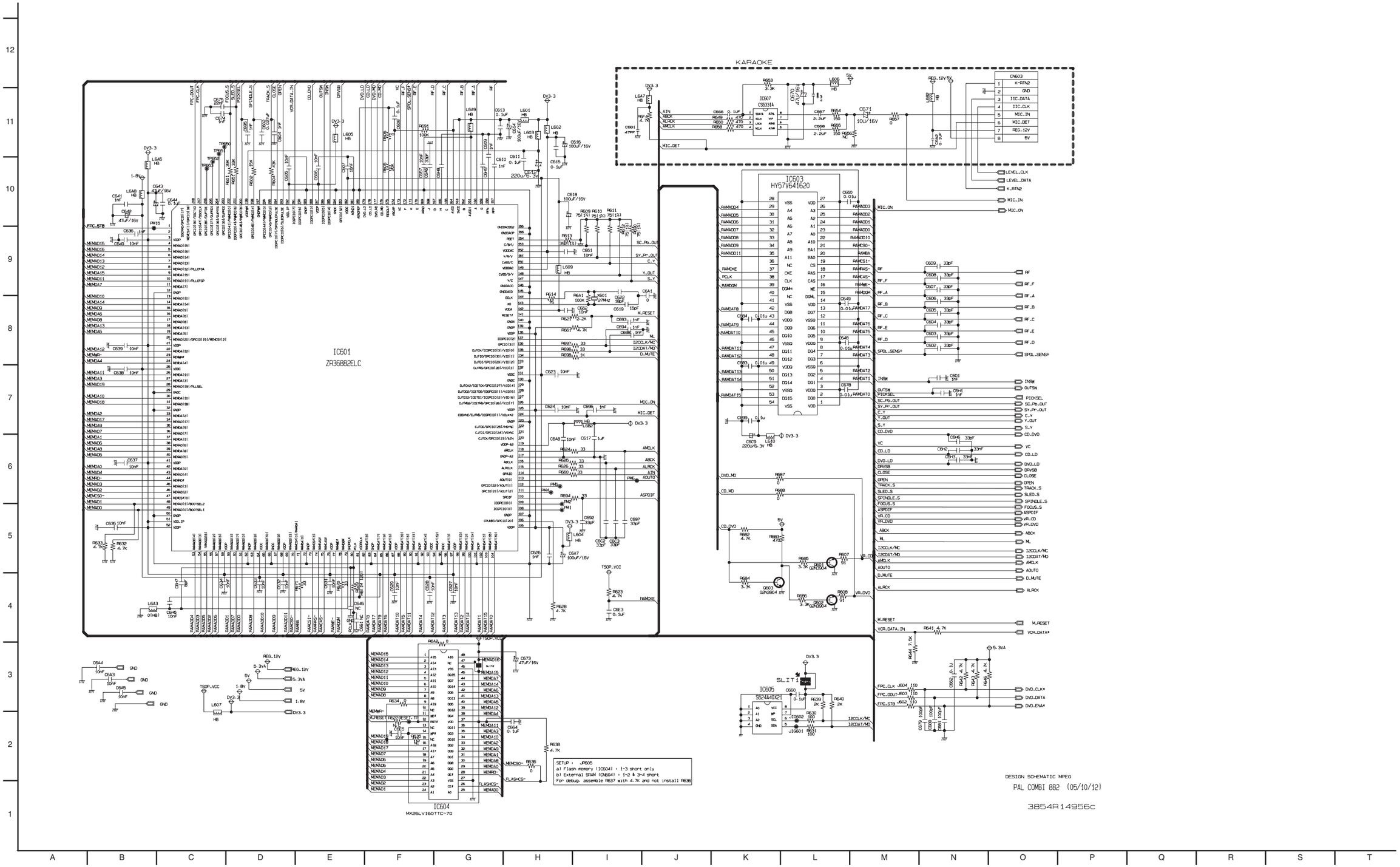

2. SERVO CIRCUIT DIAGRAM

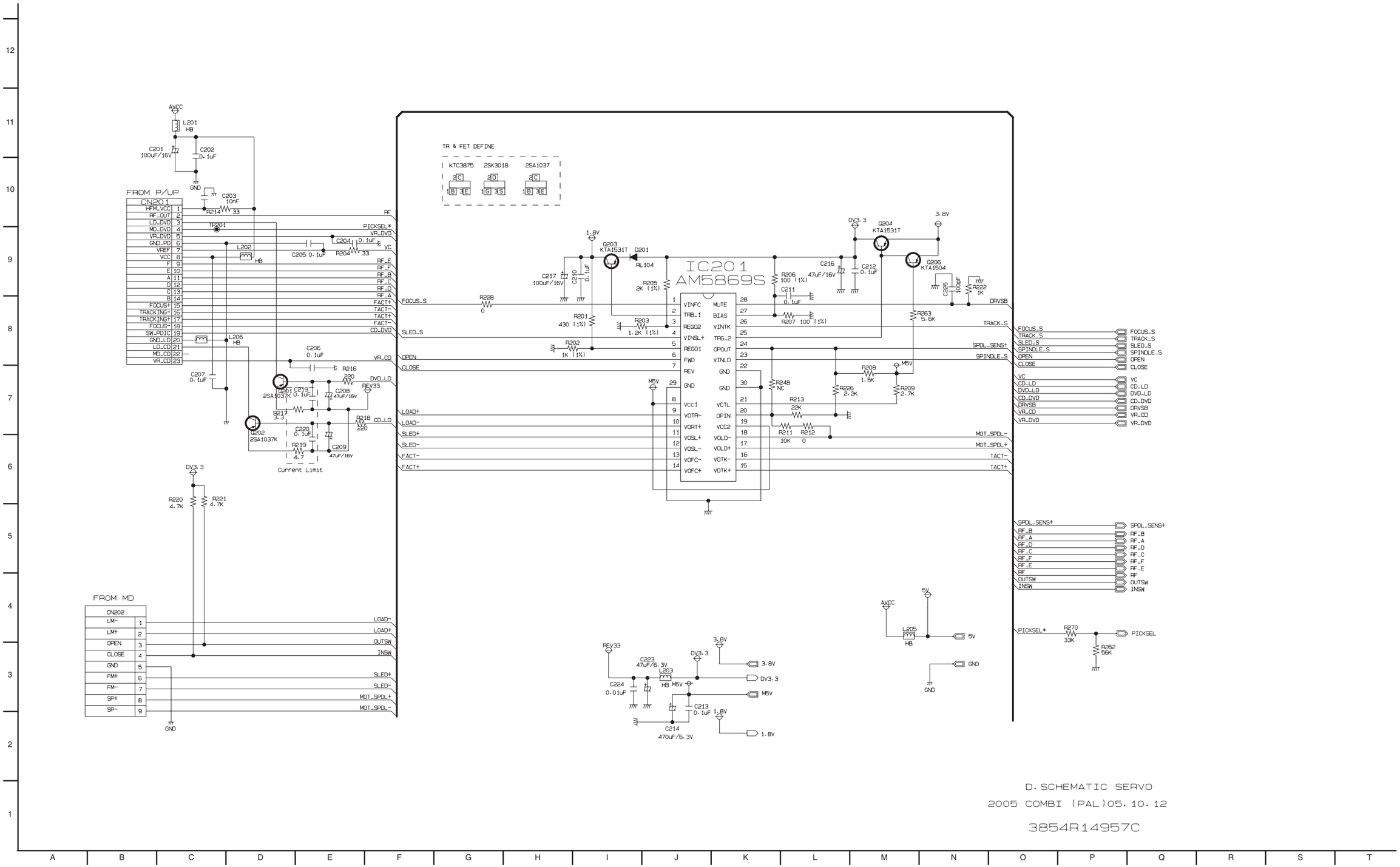

3. 2DAC CIRCUIT DIAGRAM

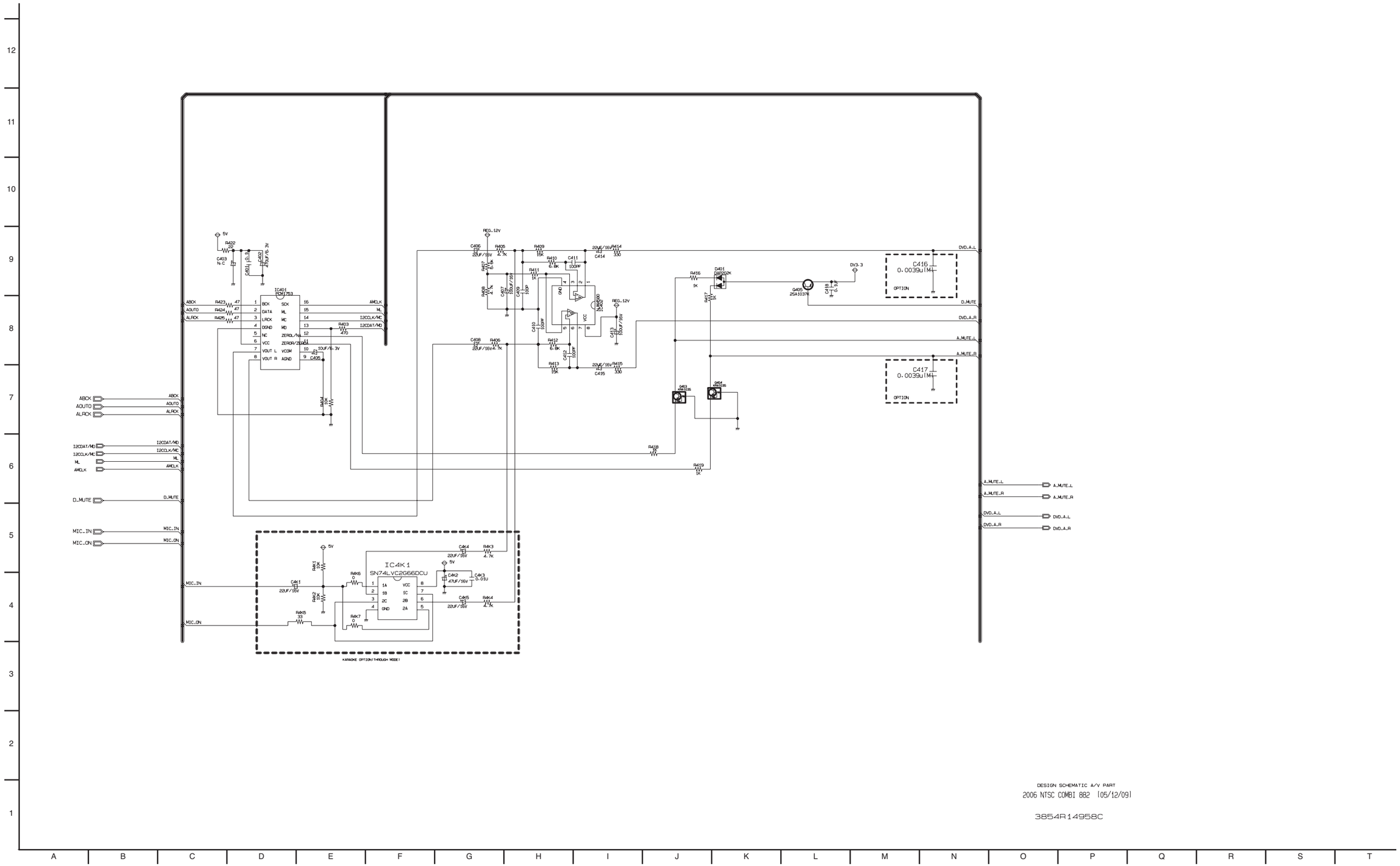

MEMO

MEMO

SECTION 4 MECHANISM OF VCR PART(D-37)

CONTENTS

POSITION DRAWING OF DECK MECHANISM PARTS

- **Top View.....4-1**
- **Bottom View 4-1**

DISASSEMBLY AND ASSEMBLY OF DECK MECHANISM

1. Disassembly of Drum assembly.....4-2
2. Disassembly of Plate top disassembly..... 4-4
3. Holder Assembly CST.....4-4
4. Disassembly of Gear Assembly Rack F/L.....4-4
5. Opener Door 4-4
6. Arm Assembly F/L.....4-4
7. Lever Assembly S/W.....4-4
8. Motor Assembly L/D.....4-5
9. Gear Wheel.....4-5
10. Arm Assembly Cleaner.....4-5
11. Head F/E.....4-5
12. Base Assembly A/C Head.....4-5
13. Brake Assembly T 4-6
14. Arm Assembly Tension.....4-6
15. Reel S / Reel T.....4-6
16. Base Assembly P4 4-7
17. Opener Lid 4-7
18. Arm Assembly Pinch 4-7
19. Arm T/up 4-7
20. Supporter, Capstan 4-8
21. Belt Capstan/Motor Capstan.....4-8
22. Lever F/R 4-8
23. Clutch Assembly D37.....4-8
24. Gear Drive/Gear Cam 4-9
25. Gear Sector.....4-9
26. Brake Assembly Capstan.....4-9
27. Plate Slider.....4-9
28. Lever Tension.....4-9
29. Lever Spring.....4-9
30. Lever Brake.....4-9
31. Gear Assembly P2/Gear Assembly P3 ...4-10
32. Base Assembly P2/Base Assembly P3...4-10
33. Base Loading 4-10
34. Base Tension.....4-11
35. Arm Assembly Idler Jog 4-11

DECK MECHANISM ADJUSTMENT

- **Fixtures and tools for service 4-12**

1. Mechanism Assembly Mode Check 4-13
2. Previous Preparation for Deck Adjustment 4-14
3. Torque Measuring 4-14
4. Guide Roller Height Adjustment.....4-15
   - 4-1. Prior Adjustment.....4-15
   - 4-2. Fine Adjustment 4-15
5. Audio/Control (A/C) Head Adjustment.....4-16
   - 5-1. Prior Adjustment.....4-16
   - 5-2. Tape Path Check between Pinch Roller and Take-up Guide 4-17
   - 5-3. Fine Adjustment (Azimuth Adjustment).....4-17
6. X-distance Adjustment 4-17
7. Adjustment after Drum Assembly (Video Heads) 4-18
8. Tachometer Adjustment of Deck Assembly.....4-18
   - 8-1. Check of Audio, RF Normalization Time (Locking Time) in Play after CUE or REV.....4-18
   - 8-2. Check of Tape Curl and Jam Status.....4-18

PROTECTION, MAINTENANCE AND CHECK OF VIDEO FUNCTION

1. Checking Points before Repair 4-19
2. Essential Check and Repair.....4-20
3. Regular Check and Repair.....4-20
4. Tools for Check and Repair.....4-20
5. Maintenance Process.....4-20
   - 5-1. Removal of Foreign Materials.....4-20
   - 5-2. Grease Application.....4-21

TROUBLESHOOTING GUIDE

1. Deck Mechanism.....4-23
2. Front Loading Mechanism.....4-26

EXPLODED VIEWS

1. Front Loading Mechanism Section.....4-28
2. Moving Mechanism Section(1) 4-29
3. Moving Mechanism Section(2) 4-30

POSITION DRAWING OF DECK MECHANISM PARTS

• Top View

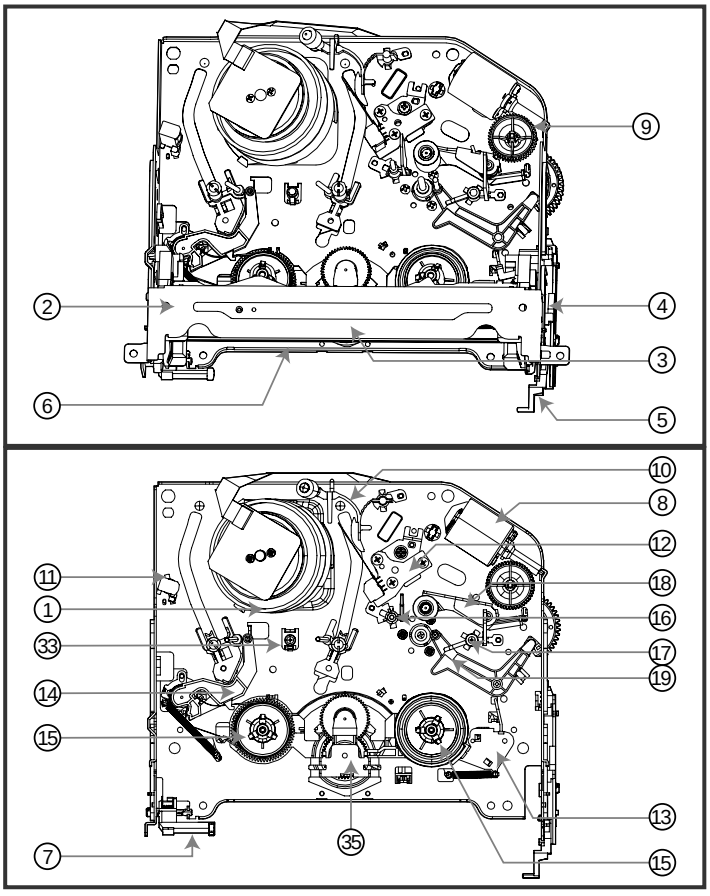

• Bottom View

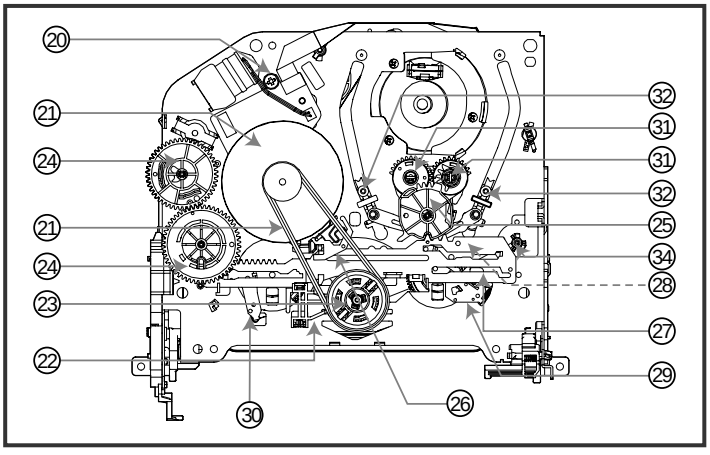

Order Of Dis-assembled / Parts firstly Disassembled		Part	Fixing Type	Ref. Draw-ings	Posi tion
	1	Drum Assembly	3 screws	A-1	T
	2	Plate Top	2 hooks	A-2	T
2	3	Holder Assembly CST	6 chasses	A-2	T
2,3	4	Gear Assembly Rack F/L	1 hook	A-2	T
2,3,4	5	Opener Door	Chassis Hole	A-2	T
2,3,4,5	6	Arm Assembly F/L	Chassis Hole	A-2	T
	7	Lever Assembly S/W	Chassis Hole, 1 hook	A-2	T
	8	Motor Assembly L/D	1 screw	A-3	T
	9	Gear Wheel	2 hooks	A-3	T
	10	Arm Assembly Cleaner	Chassis Embossing	A-3	T
	11	Head F/E	Chassis Embossing	A-3	T
	12	Base Assembly A/C Head	1 screw	A-3	T
2,3	13	Brake Assembly T	1 hook	A-4	T
2,3	14	Arm Assembly Tension	1 hook	A-4	T
2,3,13,14	15	Reel S / Reel T	Shaft	A-4	T
	16	Base Assembly P4	Chassis Embossing	A-5	T
	17	Opener Lid	Chassis Embossing	A-5	T
17	18	Arm Assembly Pinch	Shaft	A-5	T
17	19	Arm T/up	1 hook	A-5	T
	20	Supporter, capstan	Chassis Hole	A-6	B
17,18	21	Belt Capstan/Motor Capstan	3 screws	A-6	B
	22	Lever F/R	Locking Tab	A-6	B
21, 22	23	Clutch Assembly D37	Washer	A-6	B
	24	Gear Drive/Gear Cam	Washer/Hook	A-7	B
	25	Gear Sector	Hook	A-7	B
21	26	Brake Assembly Capstan	Chassis Hole	A-7	B
21,22,23, 24,2526	27	Plate Slider	Chassis Guide	A-7	B
21,22,23, 24,2526,27	28	Lever Tension	1 Hook	A7	B
21,22,23, 24,2526,27	29	Lever Spring	1 Hook	A-7	B
21,22,23, 24,2526,27	30	Lever Brake	1 Hook	A-7	B
25	31	Gear Assembly P2/ Gear Assembly P3	Bass	A-8	B
2, 3, 14, 25, 31	32	Base Assembly P2 /Base Assembly P3	6 Chasses	A-8	B
25, 31	33	Base Loading	3 Hooks	A-8	B
2,3,14	34	Base Tension	Chassis Embossing	A-9	T
	35	Arm Assembly Idler Jog	Locking Tab	A-9	T

T:Top, B:Bottom

NOTE : Assembly order is a reverse of disassembly order.

(1) For assembly, check the assembly mode is accurate.
(2) Parts firstly disassembled indicate parts firstly disassembled in disassembly of related parts.

DISASSEMBLY AND ASSEMBLY OF DECK MECHANISM

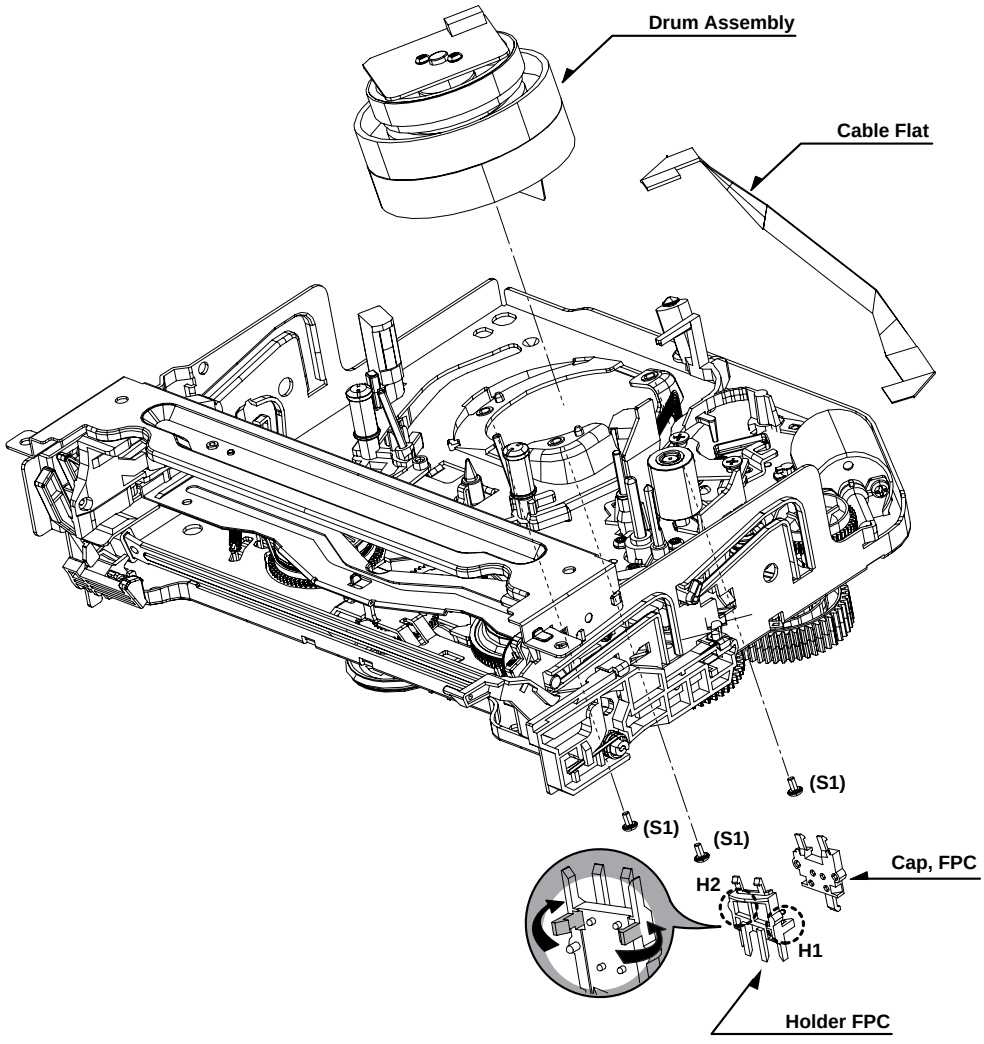

Fig. A-1

1. Disassembly of Drum Assembly (Figure A-1)

1) Separate cable flat from the Drum FPC and the Capstan Motor.
2) Release 3 screws (S1) on the bottom side of the chassis, and separate the drum assembly.
3) Release the hooks (H1, H2) and separate both the holder FPC and the Cap FPC (disassemble if necessary).

Cautions in assembly of FPC

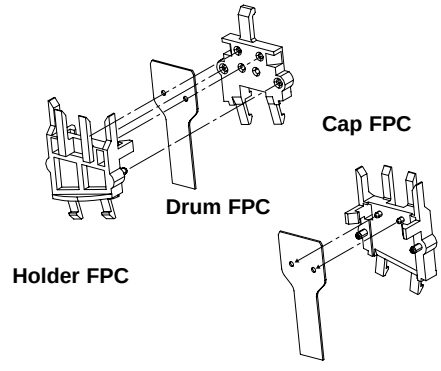

Assembly shape seen in the reverse direction

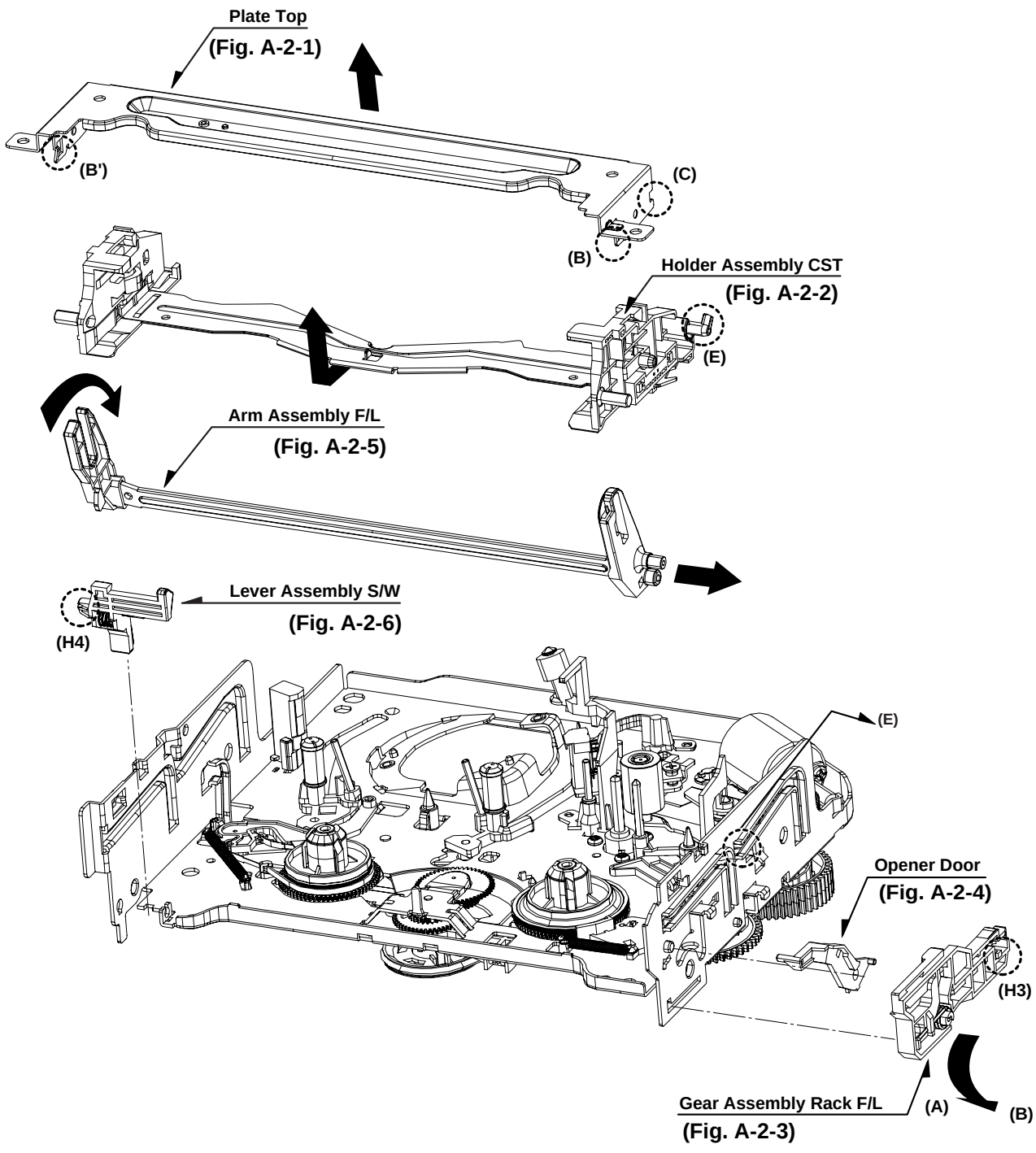
Plate Top
(Fig. A-2-1)
(B')
(C)
(B)
Holder Assembly CST
(Fig. A-2-2)
(E)
Arm Assembly F/L
(Fig. A-2-5)
Lever Assembly S/W
(Fig. A-2-6)
(H4)
(E)
Opener Door
(Fig. A-2-4)
(H3)
Gear Assembly Rack F/L
(Fig. A-2-3)
(A)
(B)

Fig. A-2

2. Disassembly of Plate Top (Fig. A-2-1)

1) Separate the right part while leaning back the (B) part of the plate top toward the arrow direction.
2) Separate the left part while leaning back the (B') part of the plate top toward the arrow direction.
   (Tool used: Tool such as (-) driver, auger, etc with pointed or flat end)

CAUTIONS

Assemble while pressing the (C), (C') part after corresponding them as in drawing.

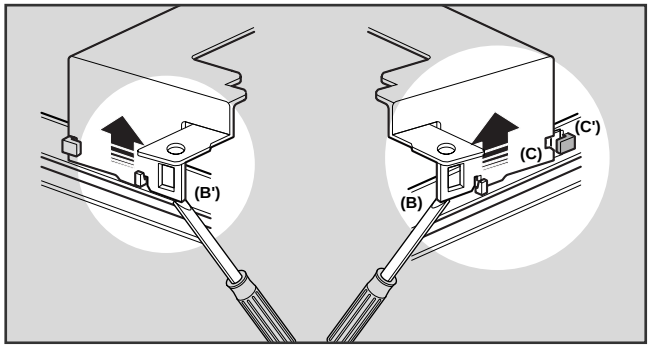

3. Holder Assembly CST (Fig. A-2-2)

1) Firstly separate the left part from the groove on the (D) part of chassis while moving the holder assembly CST toward the arrow direction.

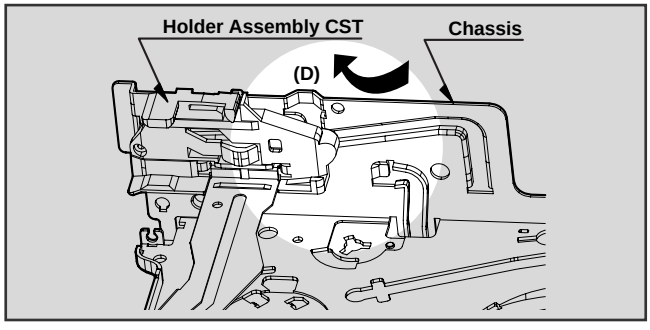

2) Separate the right part from each groove of chassis

CAUTIONS

Assemble by inserting the left part after firstly inserting the (E) part of the holder assembly CST into the groove on the (E') part of chassis.

4. Disassembly of Gear Assembly Rack F/L (Fig. A-2-3)

1) Separate the hook (H3) while leaning ahead the hook (3) after moving the gear assembly rack F/L toward the arrow (A) direction.
2) Separate the gear assembly rack F/L toward the arrow (B) direction.

CAUTIONS

For the assembly, correspond the gear part of gear assembly rack F/L to the gear drive.

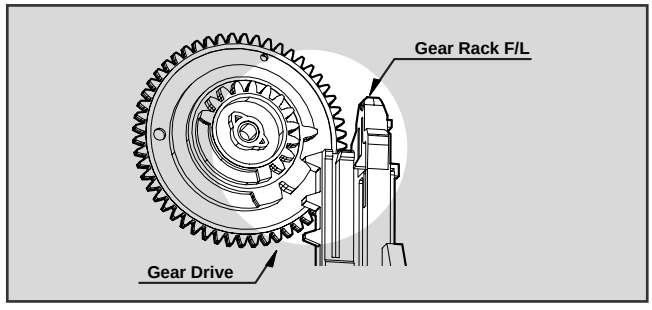

5. Opener Door (Fig. A-2-4)

1) Separate the opener door ahead from the guide hole of chassis while turning it clockwise.

6. Arm Assembly F/L (Fig. A-2-5)

1) Firstly separate the left part of the arm assembly F/L from the groove of chassis while pushing the arm assembly F/L toward the arrow direction.
2) Separate the right part from the groove of chassis.).

7. Lever Assembly S/W (Fig. A-2-6)

1) Separate the lever assembly S/W while pushing it toward the arrow direction after removing the hook (4) on the left side of chassis.

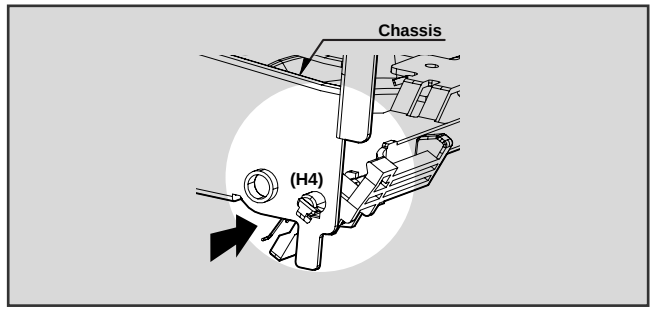

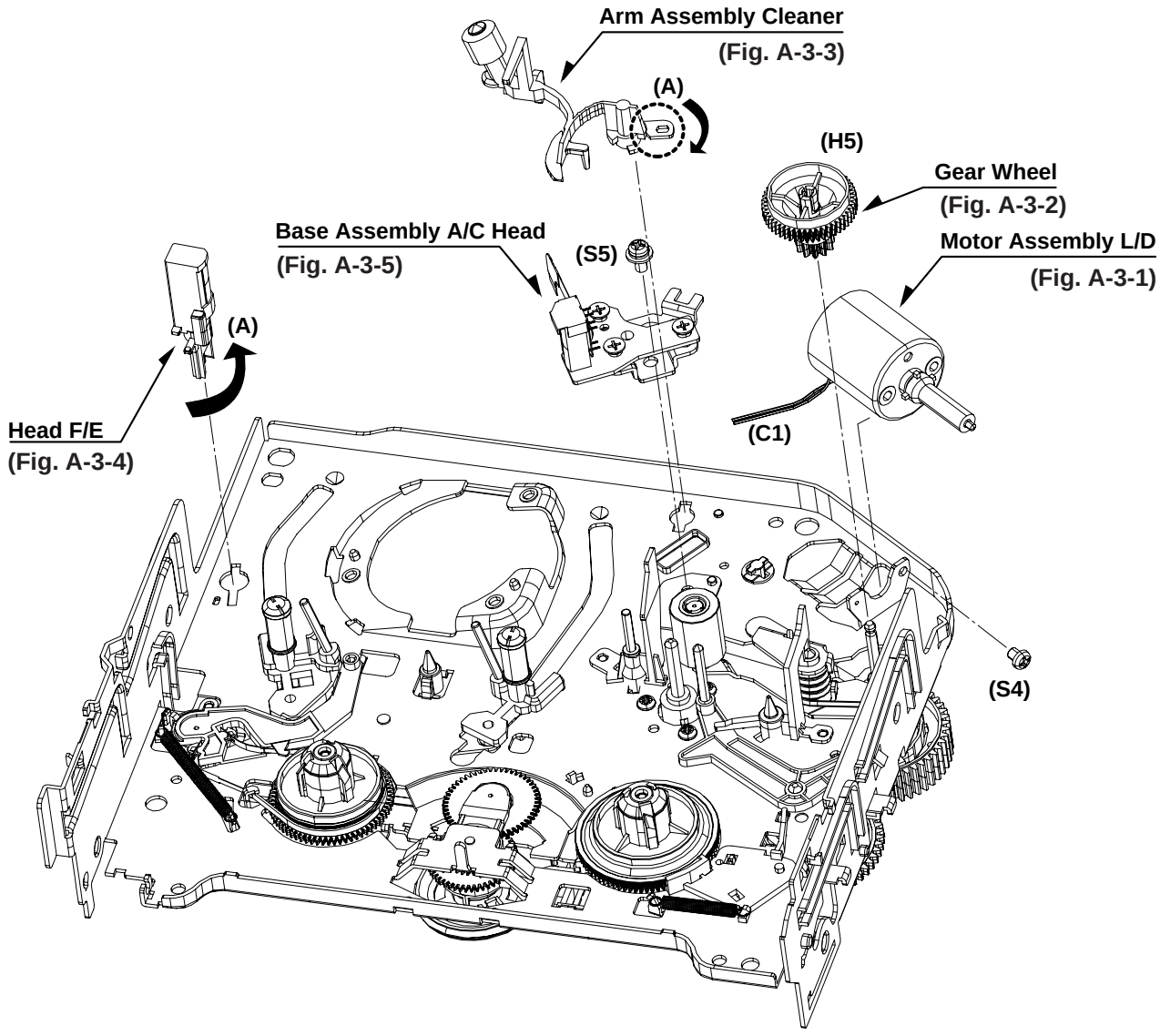

Fig. A-3

8. Motor Assembly L/D (Fig. A-3-1)

1) Take the connector (C1) connected to the Capstan motor PCB out.
2) Remove a screw (S4) of the chassis (S4) and step backward, and disassemble it while holding it up.

9. Gear Wheel (Fig. A-3-2)

1) Release the hook (H5) of the gear wheel and disassemble it upward.

10. Arm Assembly Cleaner (Fig. A-3-3)

1) Separate the (A) part of Fig. A-3-1 from the embossing of chassis, and hold it up while turning it anti-clockwise.

11. Head F/E (Fig. A-3-4)

1) Separate the (A) part of the head F/E from the embossing of chassis, and hold it up while turning it anti-clockwise.

12. Base Assembly A/C Head (Fig. A-3-5)

1) Release a screw (S5) and disassemble while holding it up.

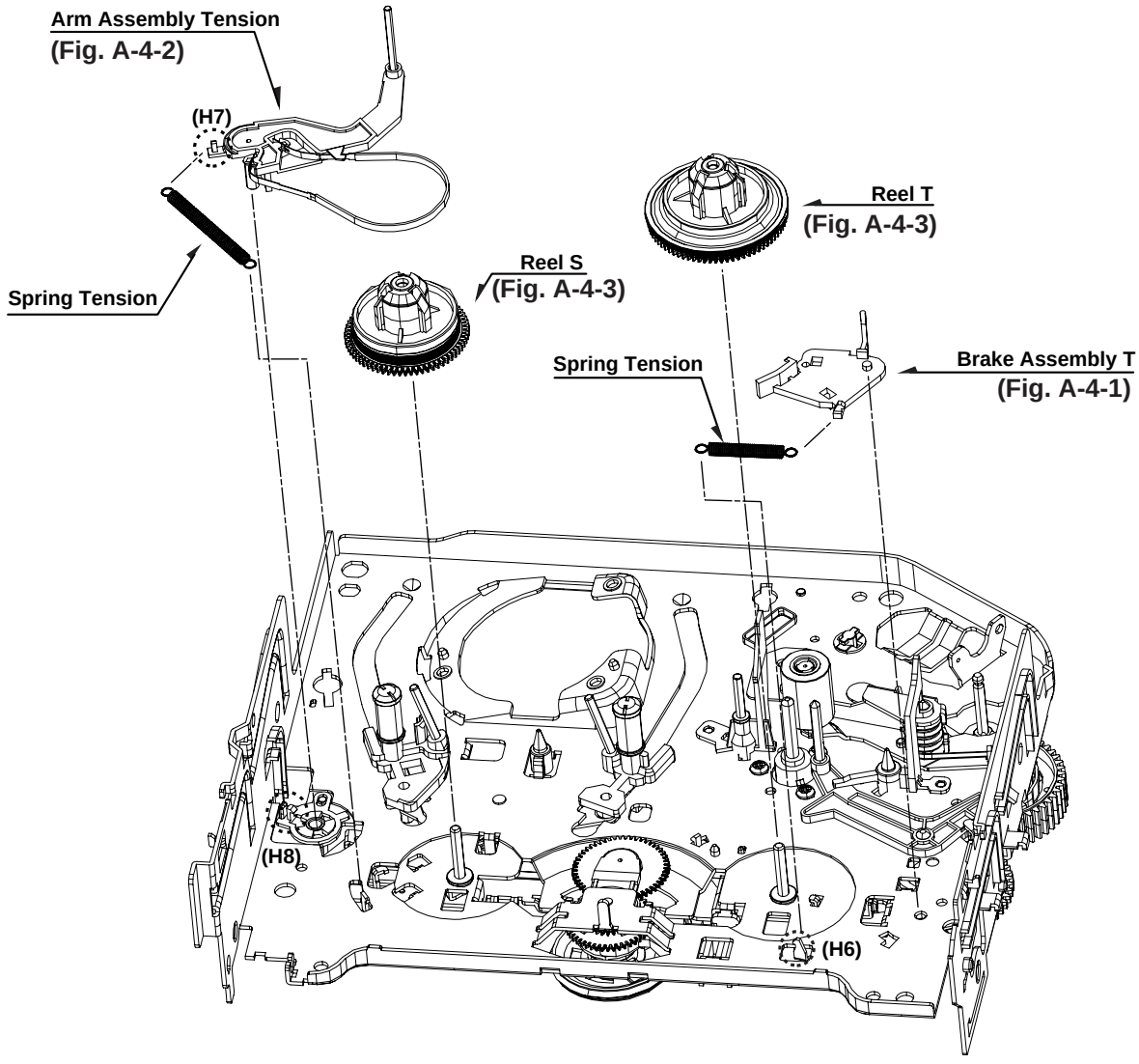

Fig. A-4

13. Brake Assembly T (Fig. A-4-1)

1) Release the spring tension from the lever spring hook (H6).
2) Disassemble the brake assembly T while holding it upward.

14. Arm Assembly Tension (Fig. A-4-2)

1) Release the spring tension the hook (H7) from the arm assembly tension.
2) After releasing the hook (H8) of the base tension, separate it while holding it up.

CAUTIONS

Spring used for both brake assembly T and arm assembly tension is used (2EA used).

15. Reel S/Reel T (Fig. A-4-3)

1) Disassemble the reel S/ reel T while holding it up (comparison between Reel S and Reel T)

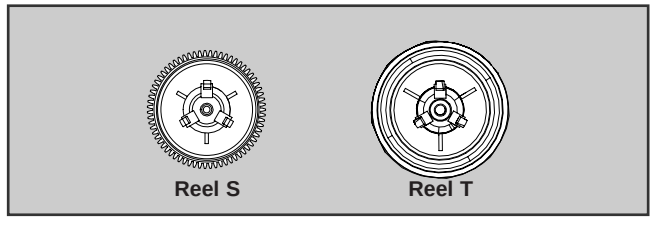

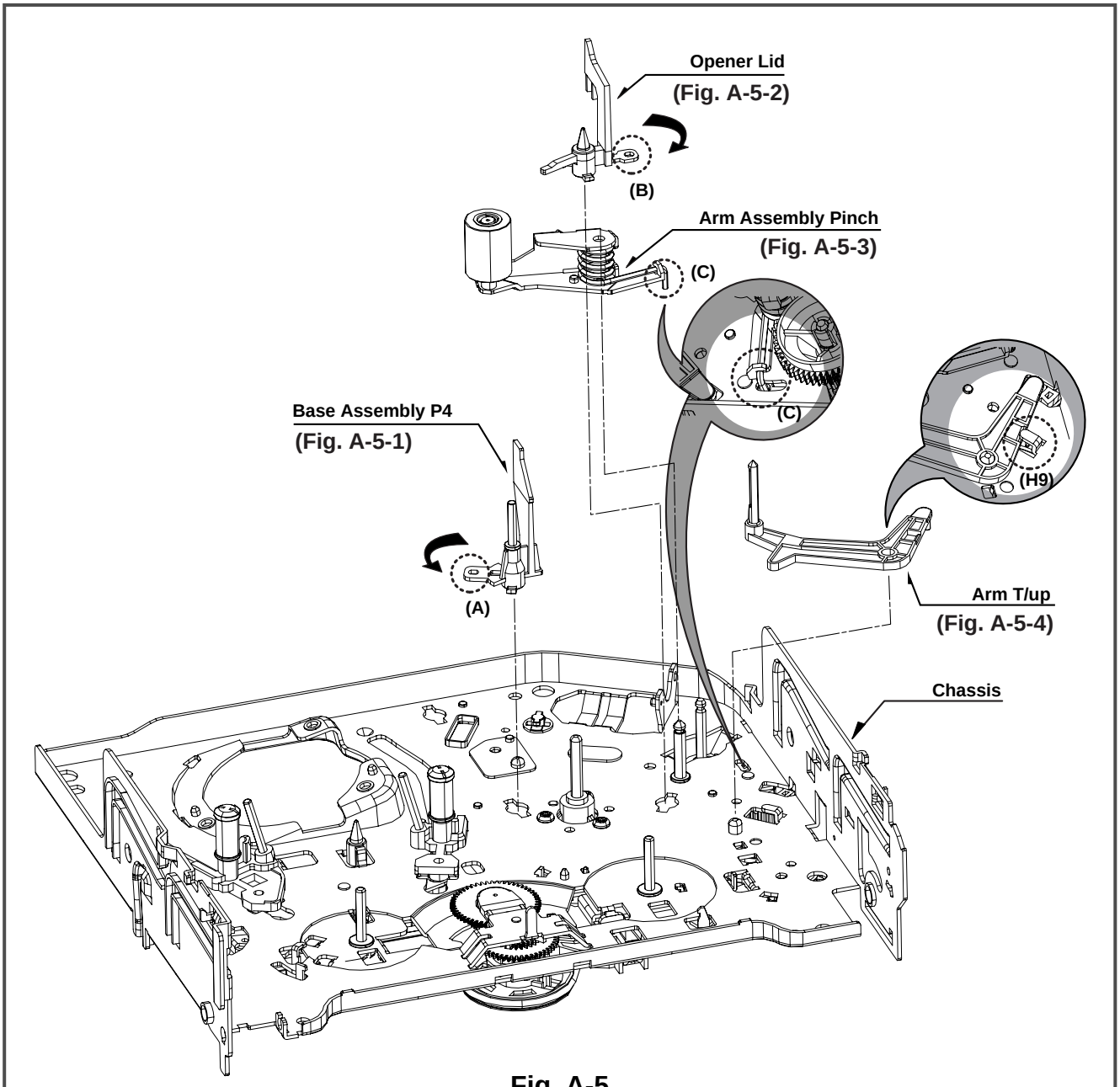

Fig. A-5

16. Base Assembly P4 (Fig. A-5-1)

1) Release the (A) part of the base assembly P4 from the embossing of chassis.
2) Hold the base assembly P4 up while turning it anti-clockwise.

17. Opener Lid (Fig. A-5-2)

1) Release the (B) part of the opener lid from the embossing of chassis.
2) Disassemble the opener lid upward while turning it anti-clockwise.

18. Arm Assembly Pinch (Fig. A-5-3)

1) Hold the arm assembly pinch up.

19. Arm T/up (Fig. A-5-4)

1) Turn the arm T/up to release the anchor jaw (H9) part of chassis and then hold it upward.

CAUTIONS

For the assembly, check the (C) part of the arm assembly pinch is assembled as in drawing.

- REVERSE THE MECHANISM.

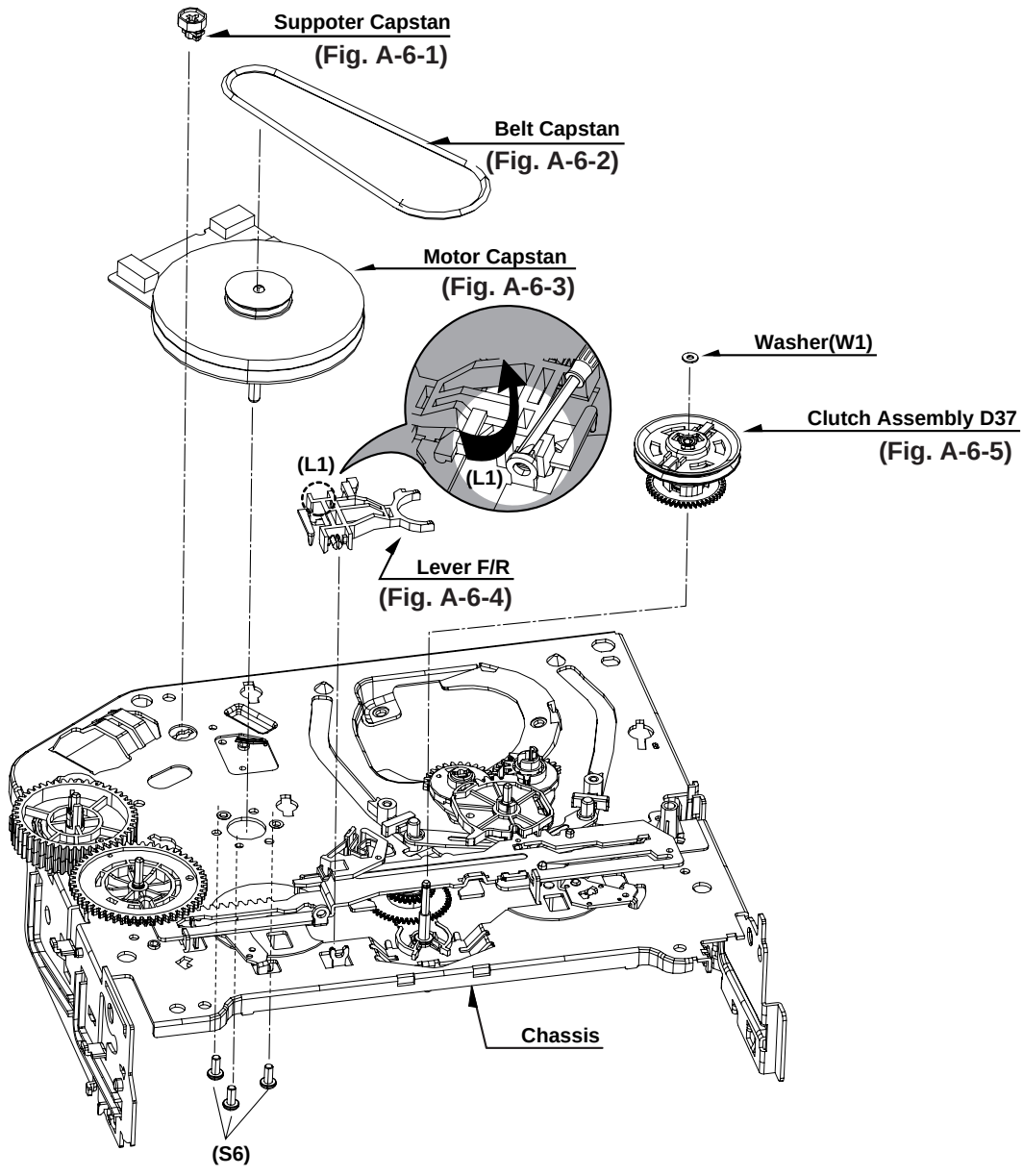

Fig. A-6

20. Supporter, Capstan (Fig. A-6-1)

1) Turn the supporter and Capstan by 90 deg. clockwise with a driver for disassembly.

21. Belt Capstan (Fig. A-6-2) / Motor Capstan (Fig. A-6-3)

1) Separate the belt Capstan.
2) Undo 3 screws (S6) on the bottom side of chassis and disassemble it upward.

22. Lever F/R (Fig. A-6-4)

1) Release the locking tab (L1) and then disassemble it upward.

23. Clutch Assembly D37 (Fig. A-6-5)

1) Remove the washer (W1) and then disassemble it upward.

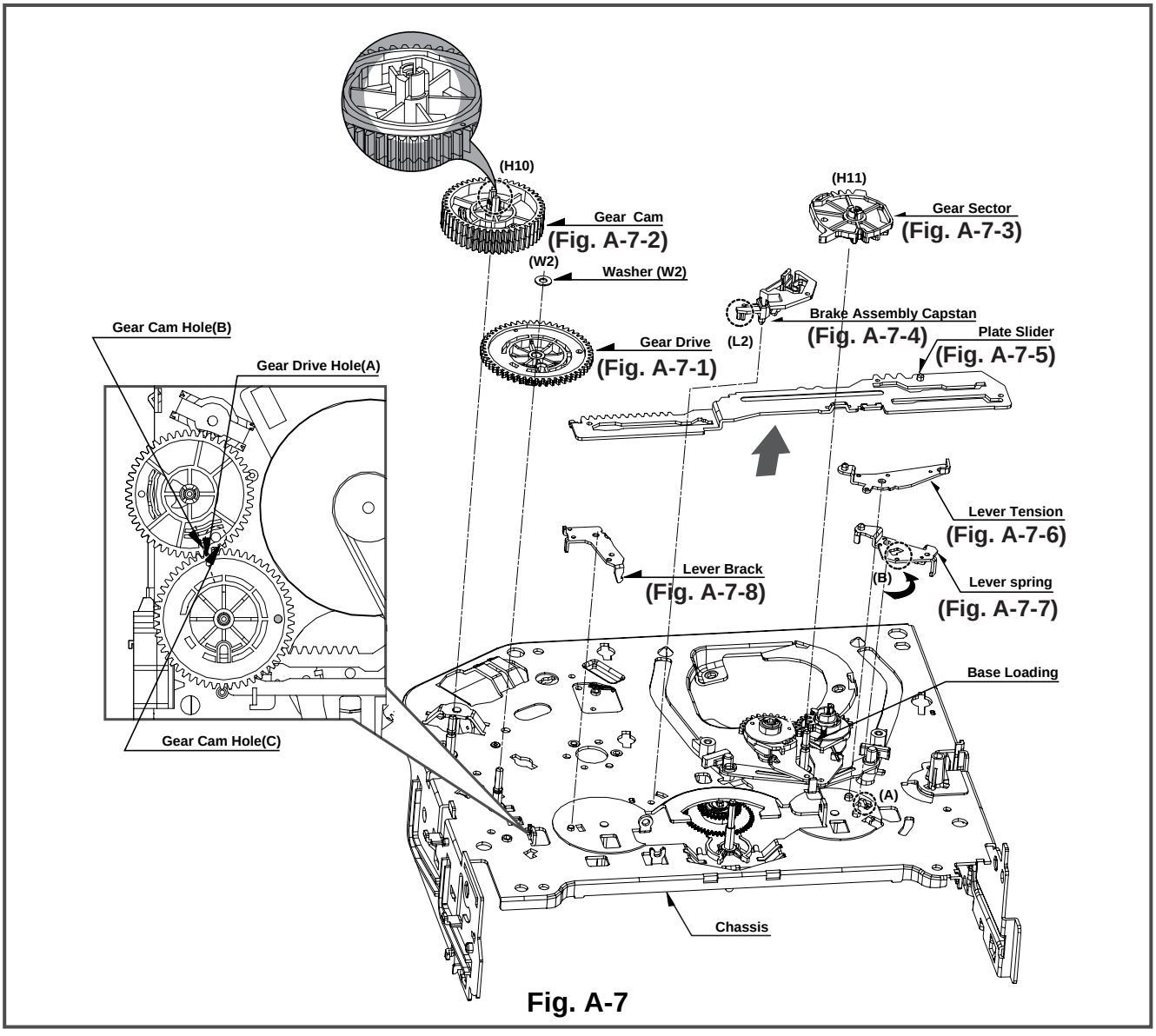

Fig. A-7

24. Gear Drive (Fig. A-7-1)/ Gear Cam (Fig. A-7-2)

1) Remove the washer (W2) and then disassemble the gear drive.
2) Release the hook (H10) of the gear cam and then disassemble it upward.

CAUTIONS

For the assembly, adjust both the gear driver hole (A) and the gear cam hole (B) straightly and then correspond the gear cam hole (C) to the chassis hole.

25. Gear Sector (Fig. A-7-3)

1) Release the hook (H11) of the gear sector and then hold the gear sector upward.

26. Brake Assembly Capstan (Fig. A-7-4)

1) Release the locking tab (L2) on the bottom side of the plate slider and then disassemble it upward.

27. Plate Slider (Fig. A-7-5)

1) Disassemble the plate slider while holding it up.

28. Lever Tension (Fig. A-7-6)

1) Release the lever tension from the guide (A) of chassis while turning it anti-clockwise.
2) Disassemble the lever tension while holding it up.

29. Lever Spring (Fig. A-7-7)

1) Release the (B) part of the lever spring from the guide (A) of chassis while turning it anti-clockwise.
2) Disassemble the lever tension while holding it up.

30. Lever Brake (Fig. A-7-8)

1) Disassemble the lever brake while holding it up.

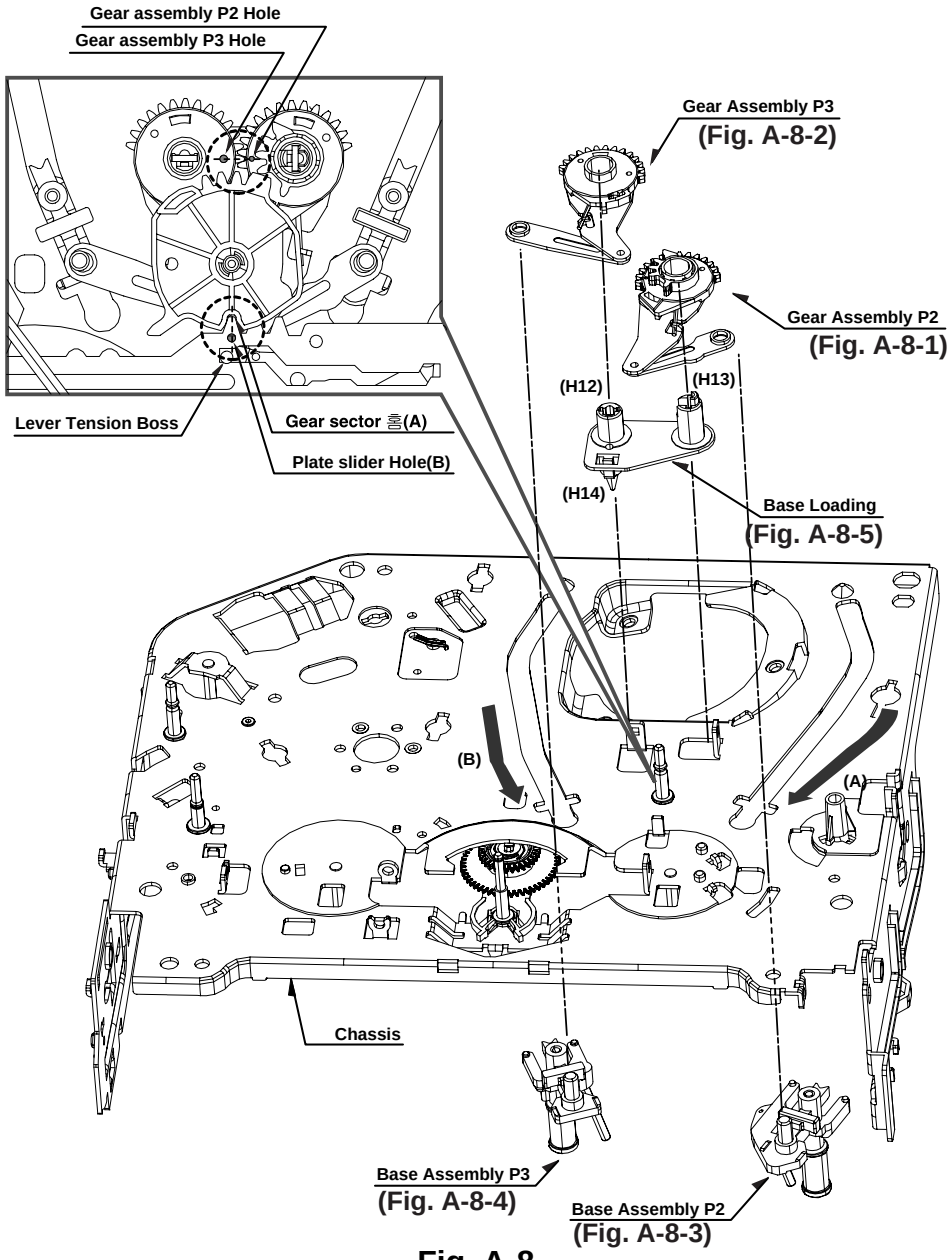

Fig. A-8

31. Gear Assembly P2 (Fig. A-8-1)/ Gear Assembly P3 (Fig. A-8-2)

1) Hold the gear assembly P2 upward.
2) Hold the gear assembly P3 upward.

CAUTIONS

For the assembly, check the holes of both the gear assembly P2 and the P3 are adjusted straightly, and then correspond the gear section groove (A) to the plate slider hole (B).

32. Base Assembly P2 (Fig. A-8-3)/ Base Assembly P3 (Fig. A-8-4)

1) Disassemble the base assembly P2 downward while moving it toward the arrow (A) direction along with the guide hole of chassis.
2) Disassemble the base assembly P2 downward while moving it toward the arrow (B) direction along with the guide hole of chassis.

33. Base Loading (Fig. A-8-5)

1) Release 3 hooks (H12, 13, 14) of the base loading, and then disassemble them upward.
   - Reverse the mechanism.

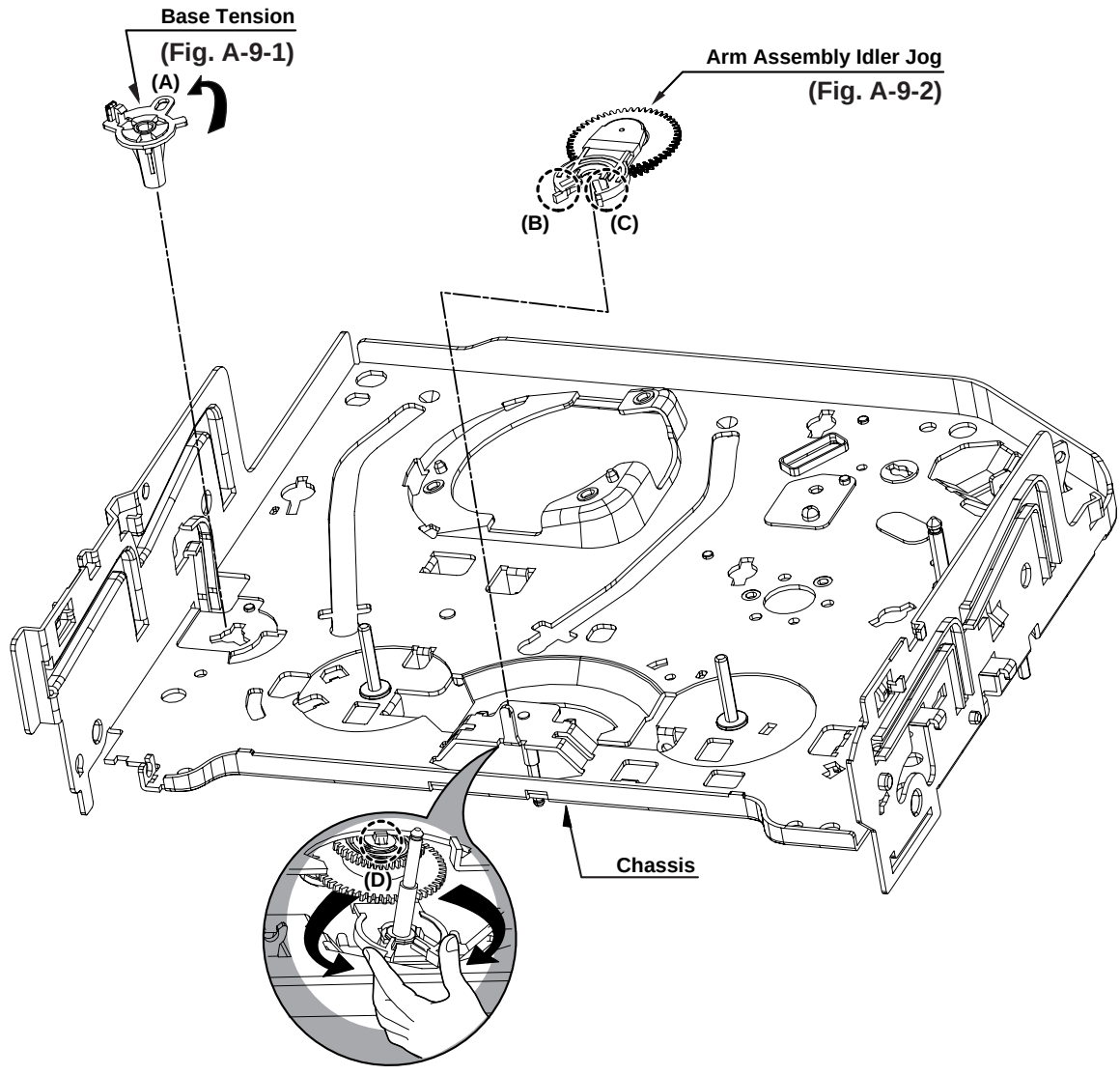

Fig. A-9

34. Base Tension (Fig. A-9-1)

1) Release the (A) part of the base tension from the embossing of chassis.
2) Hold the base tension upward while turning it anti-clockwise.

35. Arm assembly Idler Jog (Fig. A-9-2)

1) Push both (B), (C) parts in Fig. A-9-2 toward the arrow direction.
2) Disassemble the arm assembly idler upward.

CAUTIONS

Take care to ensure that the (D) part in the drawing is not hung to chassis in disassembly.

DECK MECHANISM ADJUSTMENT

• Fixtures and Tools for Service

1. Cassette Torque Meter **SRK-VHT-303(Not SVC part)** **Part No:D00-D006** 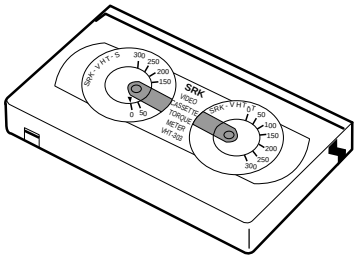	**2. Alignment tape** **Part No NTSC:DTN-0001** **PAL:DTN-0002** 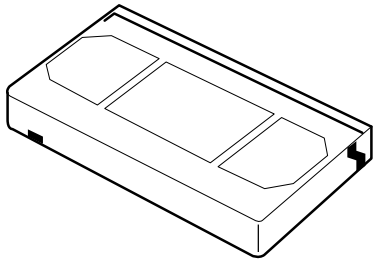	**3. Torque gauge** **600g.Cm ATG** **Part No:D00-D002** 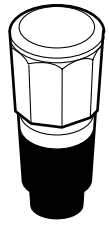
4. Torque gauge adaptor **Part No:D09-R001** 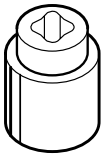	**5. Post height adjusting driver** **Part No:DTL-0005** 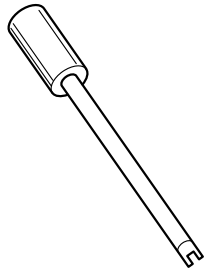	**6. + Type driver (ø5)** 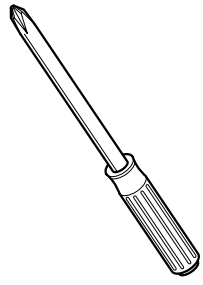

DECK MECHANISM ADJUSTMENT

1. Mechanism Assembly Mode Check

Purpose of adjustment : To make tools normally operate by positioning tools accurately.		
Fixtures and tools used	**VCR (VCP) status**	**Checking Position**
• Blank Tape (empty tape)	• Eject Mode (with cassette withdrawn)	• Mechanism and Mode Switch

1) Turn the VCR on and take the tape out by pressing the eject button.
2) Separate both top cover and plate top, and check both the hole (A) of gear cam and the hole (A') of chassis correspond (Fig. C-2).
3) If it is done as in the paragraph 2): Turn the gear cam as in No.2) after mantling the motor assembly L/D.
4) Undo the screw fixing the deck and the main frame, and separate the deck assembly. Check both the hole (A) of gear cam and the hole (A') of chassis correspond (Fig. C-1).
5) Check the mode S/W on the main P.C. board locates at a proper position as in (B) of the Fig. (C-1).
6) Connect the deck to the main P.C. board and perform all types of test.

CHECK DIAGRAM

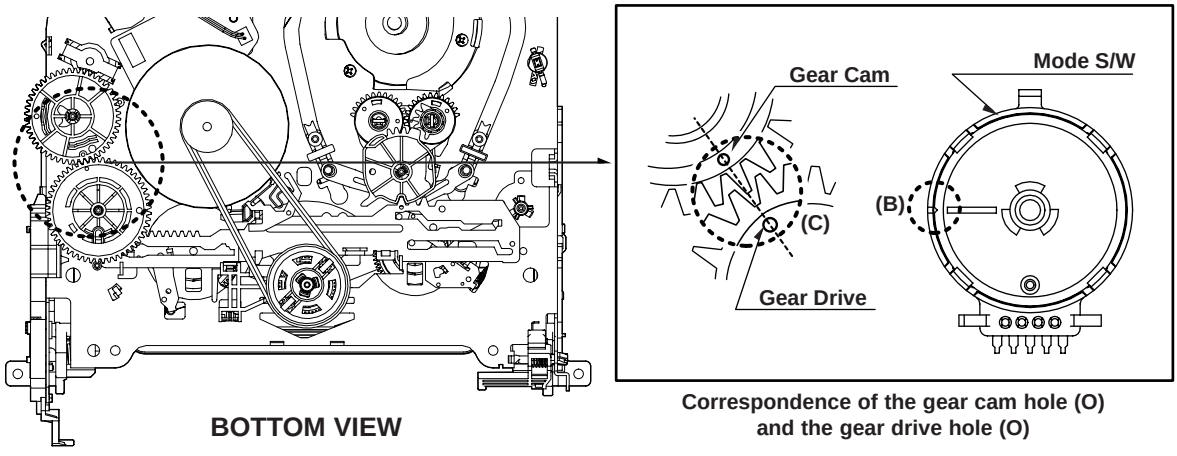

Fig. C-1

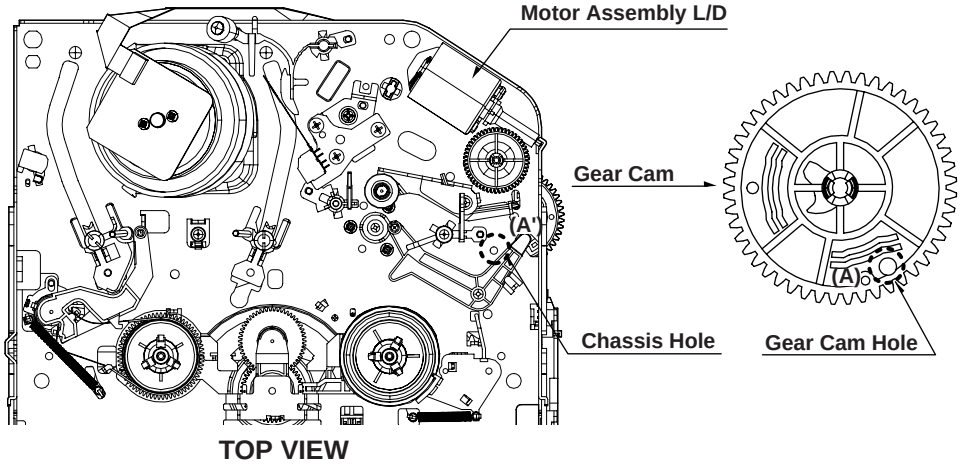

Fig. C-2

2. Previous Preparation for Deck Adjustment

(Preparation to load the VCR (VCP) with cassette tape not inserted)

1) Take the power cord from the consent.
2) Separate the top cover and the plate assembly top.
3) Insert the power cord into again.
4) Turn the VCR (VCP) on and load the cassette while pushing the lever stopper of the holder assembly CST backward. In this case, clog both holes on the housing rail part of chassis to prevent detection of the end sensor. If doing so, proceeding to the stop mode is done. In this status, input signals of all modes can be received. However, operation of the Rewind and the Review is impossible since the take-up reel remains at stop status and so cannot detect the reel pulse (however, possible for several seconds).

3. Torque Measuring

Purpose of Measuring : To measure and check the reel torque on the take-up part and the supply part that performs basic operation of the VCR (VCP) for smoothly forwarding the tape.
Measure and check followings when the tape is not smoothly wound or the tape velocity is abnormally proceeded:

Fixtures and tools used	VCR (VCP) status	Measuring method
• Torque Gauge (600 g.cm ATG) • Torque Gauge Adaptor • Cassette Torque Meter SRK-VHT-303	• Play (FF) or Review (REW) Mode	• Try to operate the VCR (VCP) per mode with the tape not inserted (See ‘2. Prior Preparation for Deck Adjustment). • Measure after adhering and fixing the torque gauge adaptor to the torque gauge (Fig. C-3-1) • Read scale of the supply or take-up part of the cassette torque meter (Fig. C-3-2).

Item	Mode	Instruments	Reel Measured	Measuring Value
Fast forward Torque	Fast Forward	Torque Gauge	Take-Up Reel	More than 400g°cm
Rewind Torque	Rewind	Torque Gauge	Supply Reel	More than 400g°cm
Play Take-Up Torque	Play	VHT-303	Take-Up Reel	40~100g°cm
Review Torque	Review	VHT-303	Supply Reel	120~210g°cm

NOTE

Adhere the torque gauge adaptor to the torque gauge for measuring the value.

• Torque Gauge (600g.cm ATG)

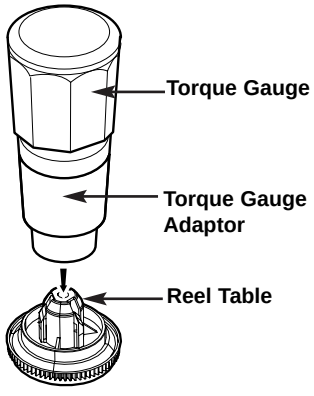

Fig. C-3-1

• Cassette Torque Meter (SRK-VHT-303)

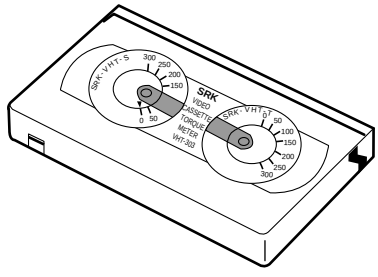

Fig. C-3-2

4. Guide Roller Height Adjustment

Purpose of adjustment : To ensure that the bottom surface of the tape can travel along with the tape lead line of the lower drum by constantly and adjusting and maintaining the height of the tape.

4-1. Prior Adjustment

Fixtures and tools used	VCR (VCP) status	Adjustment position
• Post Height Adjusting Driver	• Play or Review Mode	• The guide roller height adjusting screw on the supply guide roller and the take-up guide roller

Adjustment Procedure

1) Travel the tape and check the bottom surface of the tape travels along with the guide line of the lower drum.
2) If the tape travels toward the lower part of guide line on the lower drum, turn the guide roller height adjusting screw to the left
3) If it travels to the upper part, turn it to the right.
4) Adjust the height of the guide roller to ensure that the tape is guided on the guide line of the lower drum at the inlet/outlet of the drum. (Fig. C-4-1)

ADJUSTMENT DIAGRAM

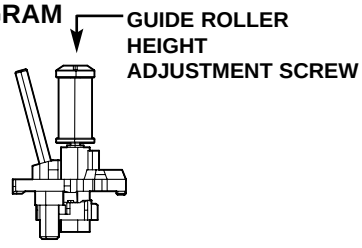

Fig. C-4-1

4-2. Fine Adjustment

Fixtures and tools used	Measuring tools and connection position	VCR (VCP) status	Adjustment position
• Oscilloscope • Standard test tape • Post height adjusting driver	• CH-1: PB RF Envelope • CH-2: NTSC : SW 30Hz PAL : SW 25Hz • Head switching output point • RF Envelope output point	• Play the standard test tape.	• Guide roller height adjusting screw

1) Play the standard test tape after connecting the probe of oscilloscope to the RF envelope output point and the head switching output point.
2) Tracking control (playback) : Locate it at the center (Set the RF output to the maximum value via the tracking control when such adjustment is completed after the drum assembly is replaced.)
3) Height adjusting screw: Flatten the RF waveform. (Fig. C-4-2)
4) Move the tracking control (playback) to the right/left. (Fig. C-4-3)
5) Check the start and the end of the RF output reduction width are constant.

CAUTIONS

There must exist no crumpling and folding of the tape due to excess adjustment or insufficient adjustment.

Waveform

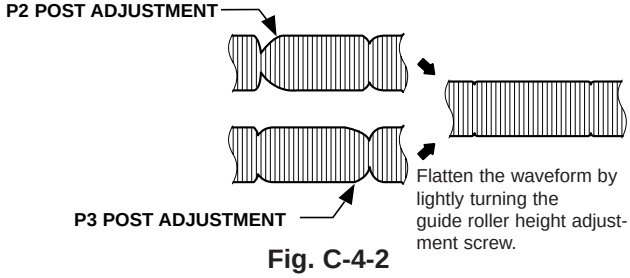

Fig. C-4-2

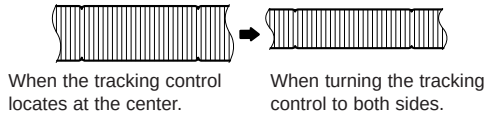

Fig. C-4-2

Connection Diagram

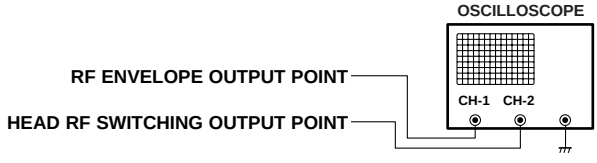

5. Audio/Control (A/C) Head Adjustment

Purpose of adjustment : To ensure that audio and control signals can be recorded and played according to the contract tract by constantly maintaining distance between tape and head, and tape tension between the P3 post and the P4 post.

5-1. Prior Adjustment (performed only when no audio output appears in play of the standard test tape)

Fixtures and tools used	VCR (VCP) status	Adjustment position
• Blank Tape (Empty Tape) • Driver (+) Type ø 5	• Play the blank tape (empty tape).	• Tilt adjusting screw (C) • Height adjusting screw (B) • Azimuth adjusting screw (A)

Adjustment Procedure/Adjustment Diagrams

1) Basically use the A/C head assembly adjusted as in SPEC.
2) Check there is crumpling and folding of the tape around the A/C head. If it is, Turn and adjust the tilt adjusting screw to ensure that the tape corresponds to the bottom guide of the P4, and recheck the tape path after proceeding play for 4-5 seconds.
3) Where the tape bottom is not equal to Fig. C-5-3, Adjust the height by using the height adjusting screw (B) and then readjust it by using the tilt adjusting screw (C).

CAUTIONS

Always check the height of the A/C head since most ideal height of A/C head can be obtained when the bottom part of the tape is away 0.2 ~ 0.25mm from the bottom part of the A/C head.

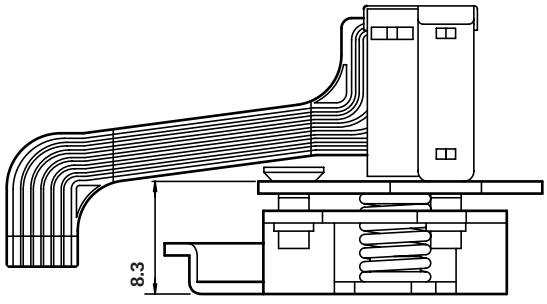

A/C Head Base

Fig. C-5-1

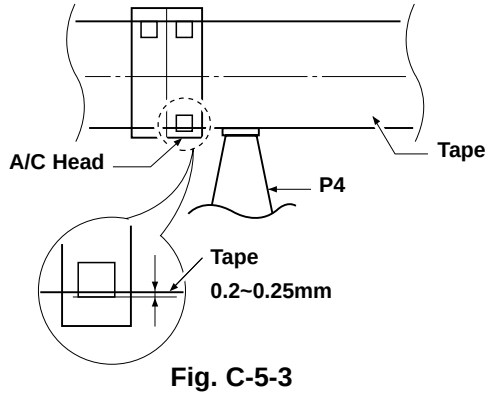

Fig. C-5-3

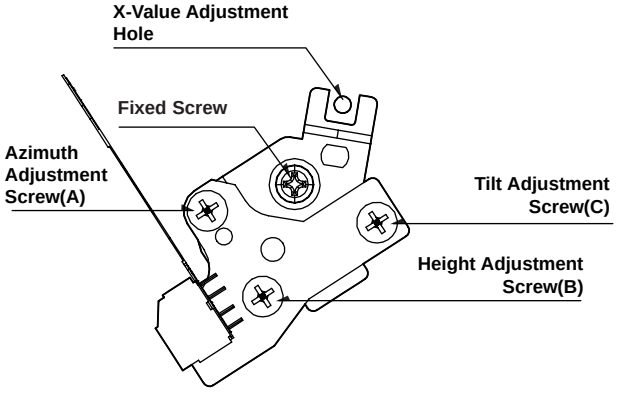

A/C Head Assembly

Fig. C-5-2

5-2. Tape Path Check between Pinch Roller and Take up Guide (Check in the Rev Mode)

1) Check the tape pass status between the pinch roller and the take-up guide.(Check there is crumpling of the tape pass and folding of the take-up guide.)
   (1) When holding of the take-up guide bottom occurs Turn the tilt adjusting screw (C) clockwise and travel it stably to ensure there is no crumbling or folding of the tape.
   (2) When holding of the take-up guide top occurs Turn the tilt adjusting screw (C) anti-clockwise and travel it stably to ensure there is no crumbling or folding of the tape.

2) Check there is folding of the tape at the bottom or top of the take-up guide in cutting-off the REV mode

CAUTIONS

If the RF waveform is changed after adjusting the A/C head, perform fine adjustment to ensure the RF waveform is flattened.

5-3. Fine Adjustment (Azimuth Adjustment)

Fixtures and tools used	Connection position	VCR (VCP) status	Adjustment position
• Oscilloscope • Standard test tape (only for SP) • Driver (+) Type Ø 4	• Audio Output Jack	• Play the standard test • Tape, 1KHz, 7KHz.	• Azimuth Adjusting Screw (A) • Height Adjusting Screw (B)

Adjustment Procedure

1) Connect the probe of Oscilloscope to the audio output jack.
2) Ensure that Audio 1KHz, 7KHz output is flattened at the maximization point by adjusting the Azimuth adjusting screw (A).

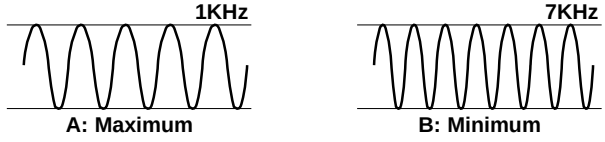

Fig. C-5-4

6. X-distance Adjustment

Purpose of adjustment : To maintain compatibility with other VCR (VCP).

Fixtures and tools used	Connection position	VCR (VCP) status	Adjustment position
• Oscilloscope • Standard test tape (only for SP) • Driver (+) Type Ø 4	• CH-1: PB RF Envelope • CH-2: NTSC ; SW 30Hz PAL:SW 25Hz • Head switching output point • RF Envelope output point	• Play the standard test tape.	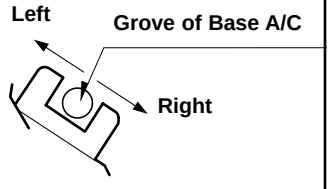

Adjustment Procedure

1) After releasing the auto tracking, lightly turn the fixing screw. Turn the (+) type driver (Ø 3 ~ Ø 4) on the X-distance adjusting hole to the right or left. Adjust the RF envelope level to the maximum point and then fix the fixing screws.
2) For the 31mm head, adjust it with the SP tape recorded in the width of 31mm since the head travels on the tape track only for SP with the width of 58mm.

Connection Diagram

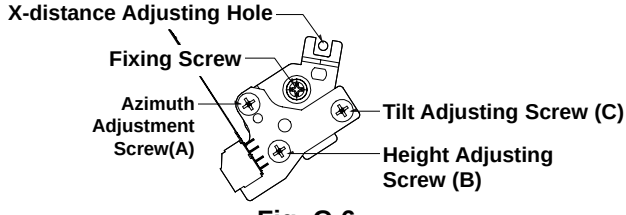

Fig. C-6

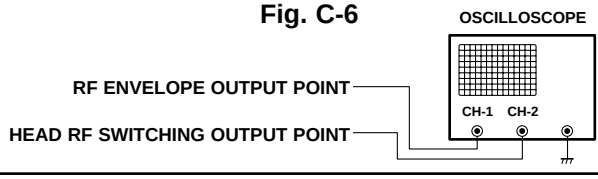

7. Adjustment after Drum Assembly (Video Heads)

Purpose of adjustment : To adjust and stabilize the height change, X-distance change, etc depending on the guide roller after assembling the drum.

Fixtures and tools used	Connection position	VCR (VCP) status	Adjustment position
• Oscilloscope • Standard test tape (only for SP) • Post Height Adjusting Driver • Driver (+) Type Ø 5	• CH-1: PB RF Envelope • CH-2: NTSC : SW 30Hz PAL:SW 25Hz • Head switching output point • RF Envelope output point	• Play the blank tape. • Play the standard test tape.	• Fine adjustment of guide roller • Switching Point • Tracking Preset • X-distance

Checking/Adjustment Procedure

1) Play the blank tape (empty tape) and check whether the guide roller crumbles or wrinkles the tape and adjust it if necessary.
2) Check that the RF envelope output waveform is flat, and adjust the height of the guide roller while playing the standard test tape.
3) Adjust the switching point.
4) Check the RF envelope output is the maximum when the tracking control locates at the center. If not maximum, set up to ensure that RF envelope output becomes the maximum by turning the (+) type driver (Ø 3 ~ Ø 4) on the base A/C groove.

Connection Diagram

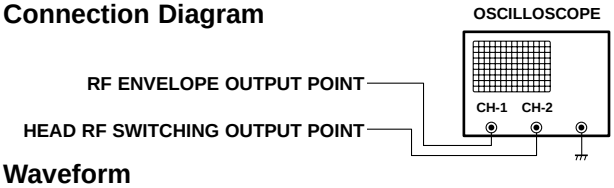

Waveform

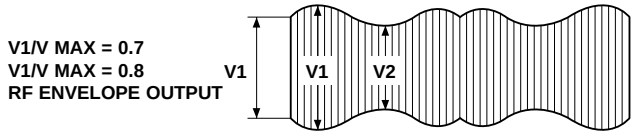

8. Check of Traveling Device after Deck Assembly

8-1. Audio, RF Normalization Time (Locking Time) Check in Play after CUE or REV

Fixtures and tools used	Measuring standard	Connection position	VCR (VCP) status
• Oscilloscope • 6H 3KHz Color Bar Standard Test tape • Stop Watch	• RF Locking Time: Within 5 seconds • Audio Locking Time : Within 10 seconds	• CH-1: PB RF Envelope • CH-2: Audio output • RF Envelope output point • Audio output jack	• Play the 6H 3KHz Color Bar Standard Test tape.

Checking Procedure

1) Check that locking time of the RF and Audio waveform is fallen within the measuring standard in conversion of the play mode from the CUE or the REV mode.
2) Readjust the paragraph 5 and 6 if it deviates from the standard.

8-2. Check of Tape Curl and Jam Status

Fixtures and tools used	Fixtures and tools used	Fixtures and tools used
• T-160 Tape • T-120 Tape	• There must be no jam or curl at the first, middle and end position of tape.	• Travel the tape at the position of its first and end.

Checking Procedure

1) Check there is no abnormality of every traveling post status.
2) There must be no abnormal operation of the counter in occurrence of folding of the bottom tape. There must be not abnormality of audio signal in damage of the top tape.
3) If there is abnormality, readjust the adjustment paragraph 4 and 5.

PROTECTION, MAINTENANCE AND CHECK OF VIDEO FUNCTION

1. Checking Points prior to Repair

Following abnormal phenomena may be repaired by removal of foreign materials and oil supply. Check oiling is required at the checking set or cleaning status is complete. Determine that necessity of checking and repair the set exists after checking the using period of the set together with the user. In this case, followings must be checked:

Phenomena	Checking Points and Cause	Replace-ment	
Color beat	Pollution of Full-Erase Head	o	F/E Head
S/N, Color Faded	Pollution of Video Head	o	Video Head
Horizontal, Vertical Jitte	Pollution of Video Head or Tape Transport System	o	
Poor Sound, Low Sound	Pollution of Audio/Control Head	o	A/C Head
No tape wound or tape wound loosely. FF or REW impossible, or slow turning	Pollution of Pinch Roller or Belt Capstan Belt	o	Pinch Roller Belt Capston
Tape loosely wound in REV or Unloading	Deterioration of Clutch Assembly D37 Torque	o	Clutch Assembly A37
	Pollution of Drum and Traveling Device	Fig. C-9-3	

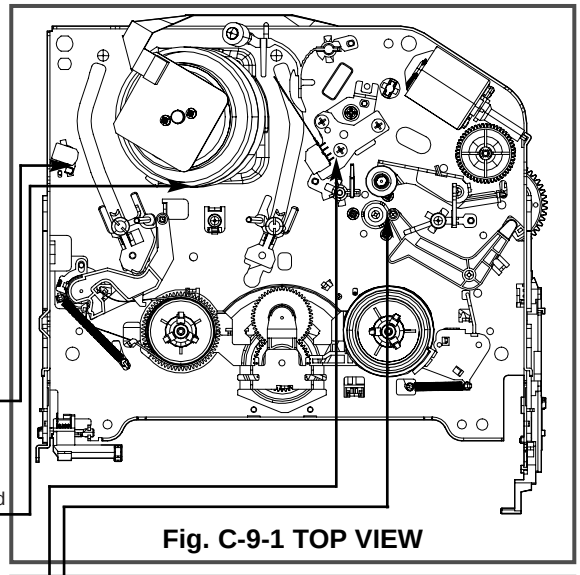

Fig. C-9-1 TOP VIEW

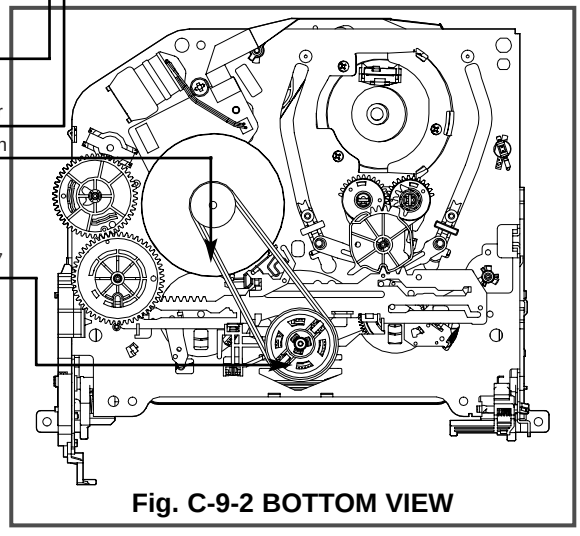

Fig. C-9-2 BOTTOM VIEW

CAUTIONS

If operation of the position with (O) mark is abnormal even after removing cause, replace it with substitute product since it shows damage or wearing.

*** No. (1) ~ (12) shows sequence that the tape moves from the supply reel to the take-up reel.)**

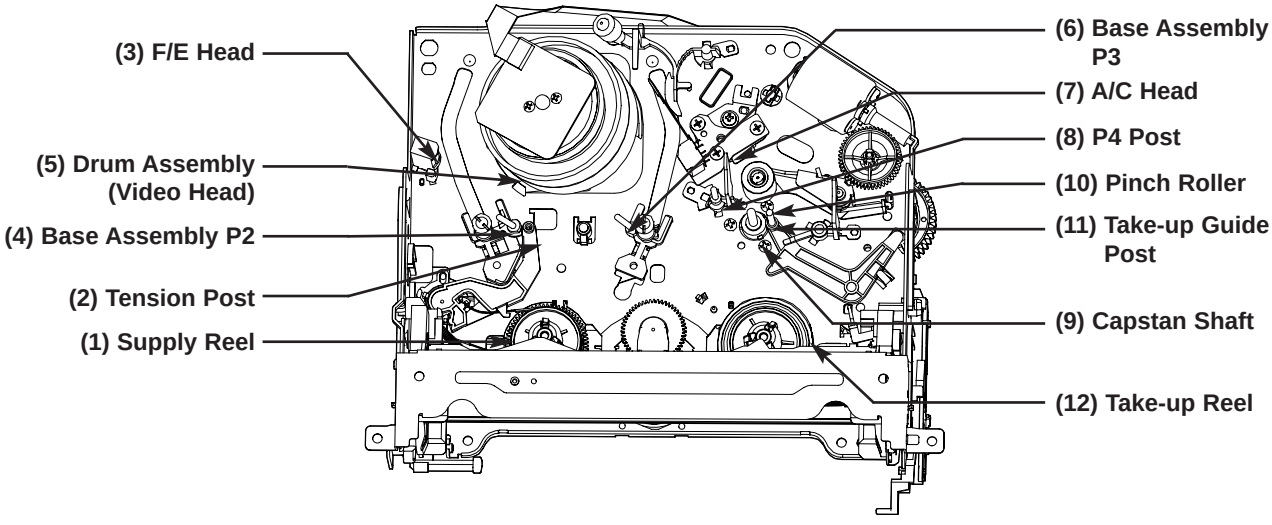

Fig. C-9-3 Tape Transport System

2. Essential Check and Repair

Recording density of the video is far higher than the audio. Therefore video parts are very precise so as to allow only error of 1/1000mm or so in order to maintain compatibility with other videos.
If one of these parts is polluted or old, same phenomena will appear as they are damaged.
To maintain clear screen, regular check, replacement of old and damaged parts and oil supply, etc are essential.

3. Regular Check and Repair

Check and repair schedule is not constant since they vary depending on method that the consumer uses video and environment where the video is installed at.
However, for the video used by common household, good screen will be maintained if regular check and repair per 1,000 hour is performed. The following chart shows relationship between using time and checking time:

Table 1

Time Requiring Checking / Average hours used per day	About 1 year	About 18 months	About 3 years
One hour	■	■	■
Two hours	■	■	
Three hours	■		

4. Tools for Check and Repair

(1) Grease: Floil G-3114 (KANTO) or equivalent grease (Green)
(2) Grease: Kanto G-754, PL-433 (Yellow)
(3) Alcohol (Isopropyl Alcohol)
(4) Cleaning Patch (cloth)

5. Maintenance Process

5-1) Removal of Foreign Material

(1) Removal of foreign material from video head (Fig. C-9-4)
Firstly try to use a cleaning tape.
Use a cleaning patch if foreign materials are not removed with the cleaning tape due to severe dirty of the head. Soak the cleaning patch in alcohol and put it to the head tip. Smoothly turn the drum (turning cylinder) to the right or left (In this case, the cleaning patch must not be moved vertically).
After completely drying the head, test the traveling status of the tape.
If alcohol (Isopropyl Alcohol) remains at the video head, the tape may be damaged when this solution touches with the head surface.

Never use a cloth bar (commercial sale)

(2) Wipe the tape transport system and the drive system with the cleaning patch soaked in alcohol (Isopropyl Alcohol) when removing foreign materials from them.
1) The part touched with the traveling tape is called as tape transport system. The drive system consists of parts to travel the tape.
2) Care must be exercised so that unreasonable force to change the pattern will be applied to the tape transport system during removal of foreign materials.

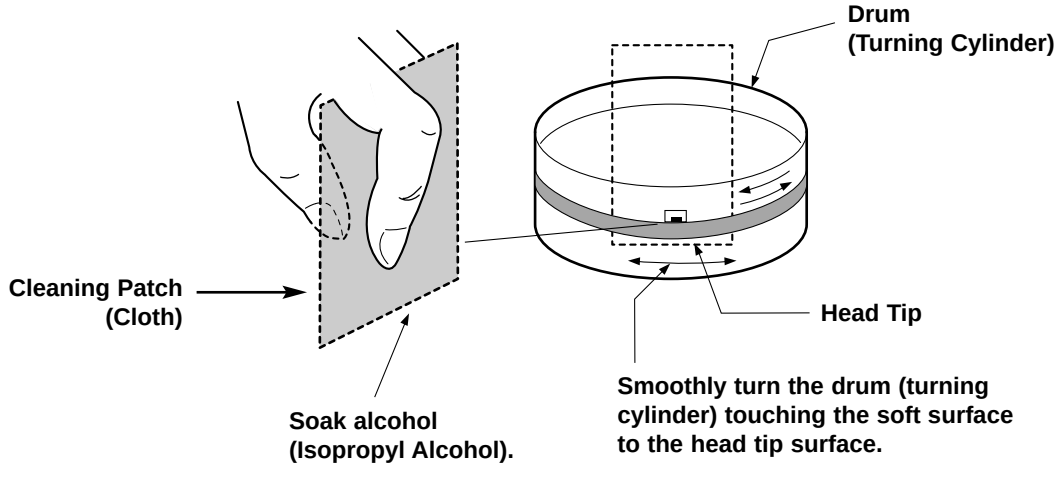

Fig. C-9-4

5-2) Grease Applications

(1) Grease Application Method

Apply grease by using a cloth swab or brush. Care must be exercised so that excess quantity should not be used. If the excessive quantity is applied, wipe it with the gauze soaked in alcohol (Isopropyl Alcohol).

NOTE: POSITION OF GREASE APPLICATION

(1) Inner Side Surface and Top Surface of Loading Path
(2) Stable Adhesion Part of Base P2, P3
(3) Arm Pinch Shaft
(4) Gear Wheel Shaft
(5) Reel S. T. Shaft
(1) (2) (3) (4): KG-684G (Green)
(5): PL-433 (Yellow)

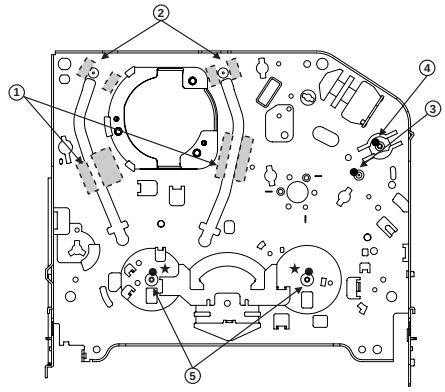

Chassis (TOP)

Gear Part

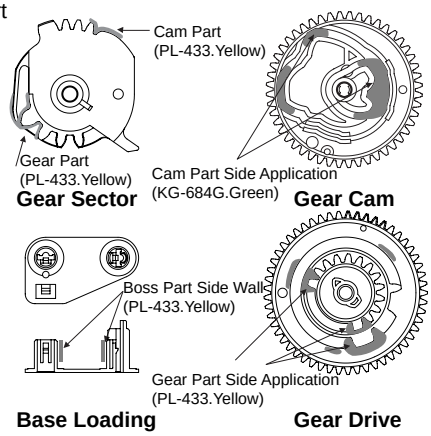

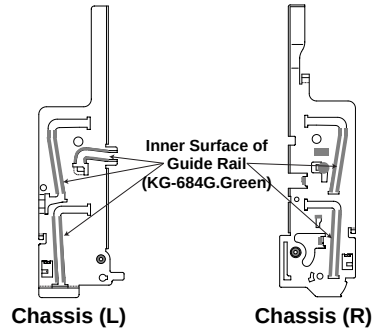

Chassis (L) **Chassis (R)**

(2) Regular Grease Application

Apply grease to the designated application position every 500 hour.

(1) Inner Side Surface and Top Surface of Loading Path
(2) Stable Adhesion Part of Base P2, P3 Coil
(3) Gear Cam Shaft
(4) Gear Drive Shaft
(5) Clutch Shaft Groove
(6) Guide Part on the Plate Slider Side Wall (Left)
(7) Guide Part on the Plate Slider Side Wall (Right)
(1) (2) (3) (4) (5) (6) (7): KG-684G (Green)

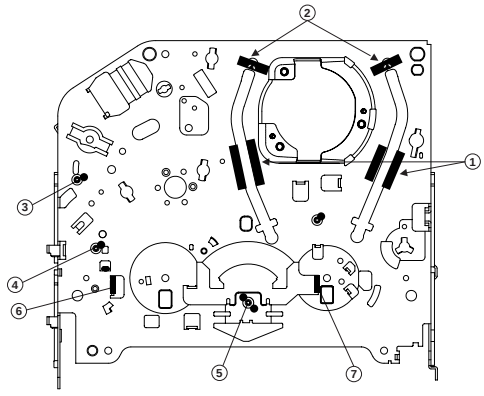

Chassis (Bottom)

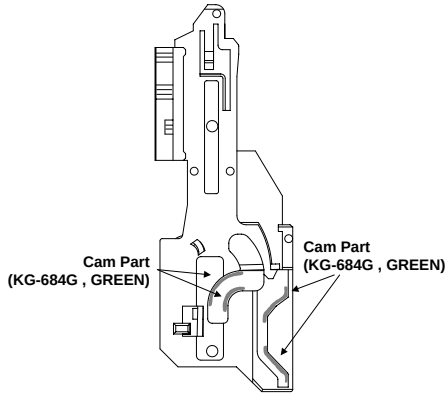

Gear Rack F/L

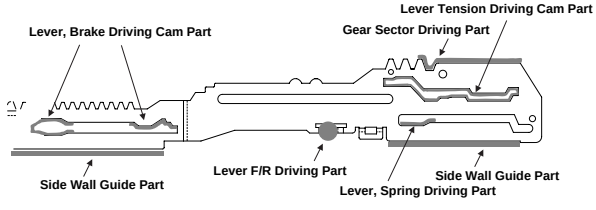

Plate Slider

Lever, F/R, Base, Tension

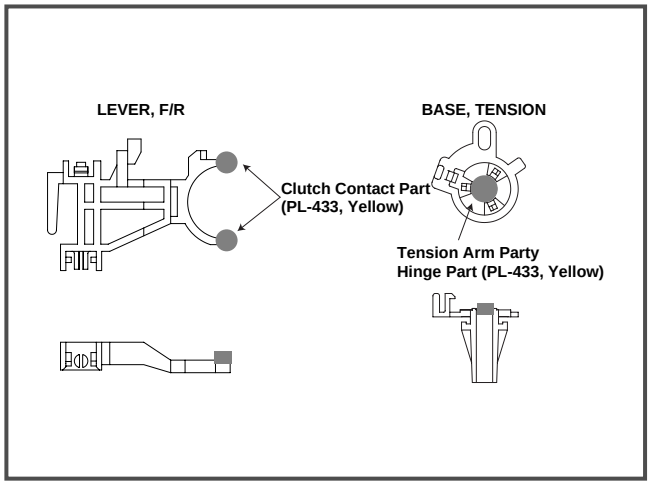

GEAR AY, P2 & P3

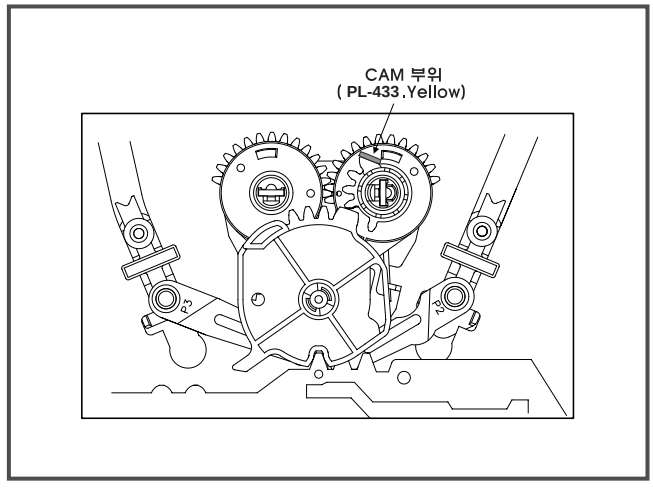

MECHANISM TROUBLESHOOTING GUIDE

1.Deck Mechanism

A.

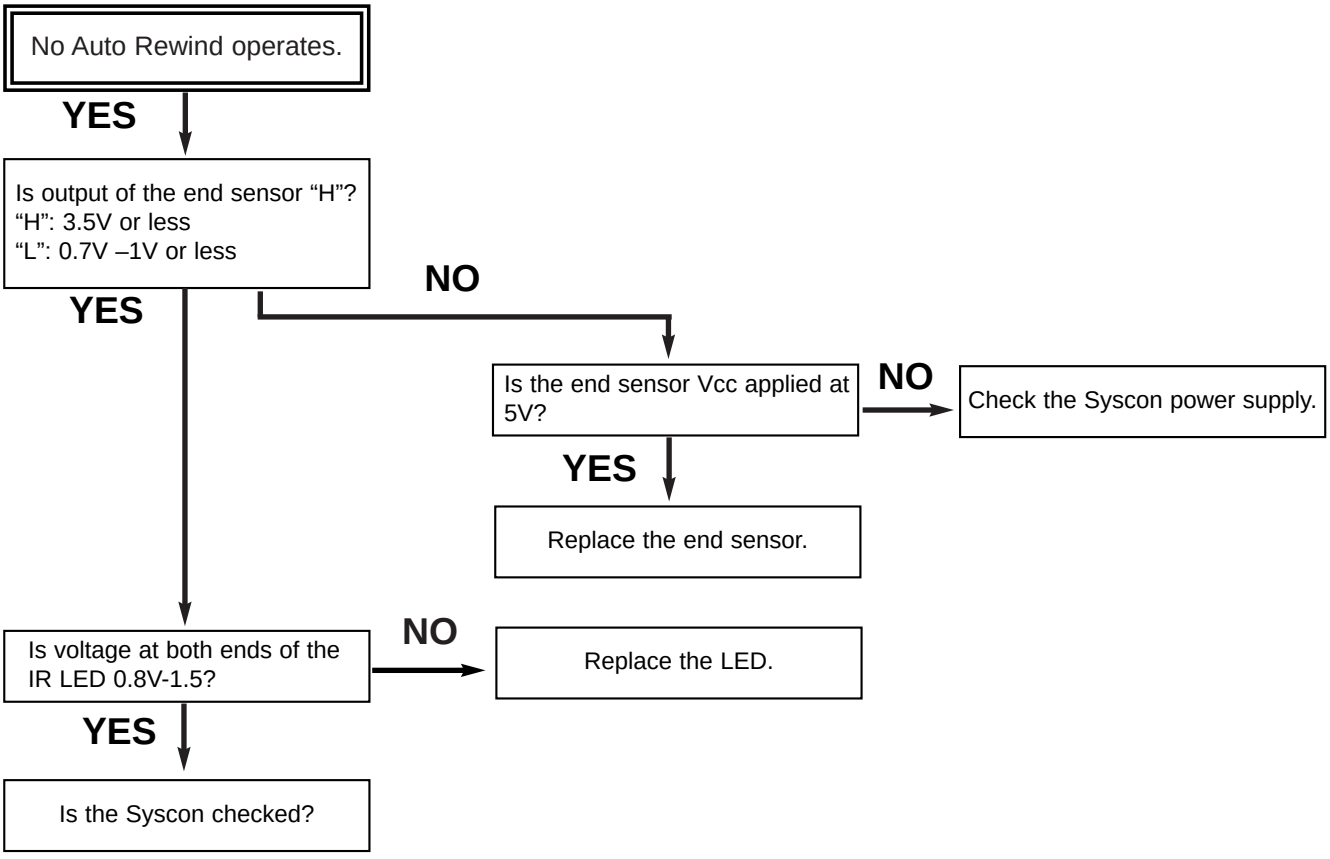

B.

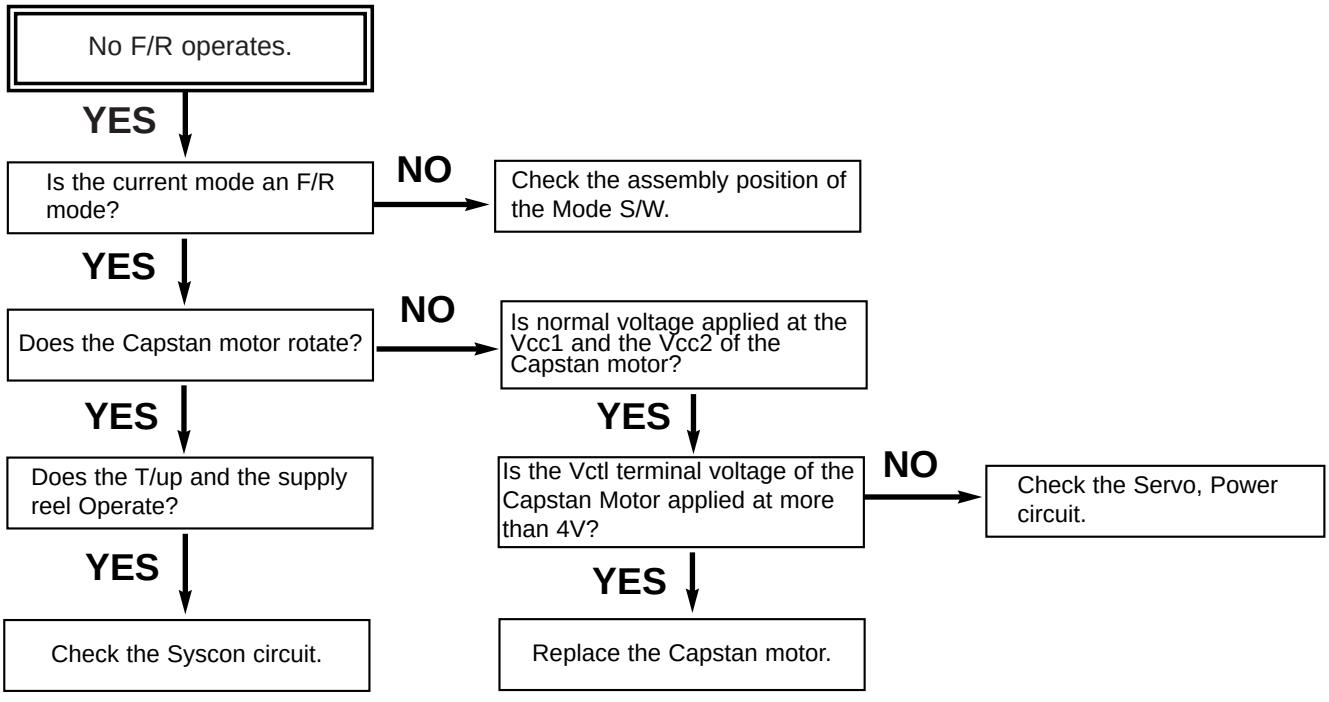

C.

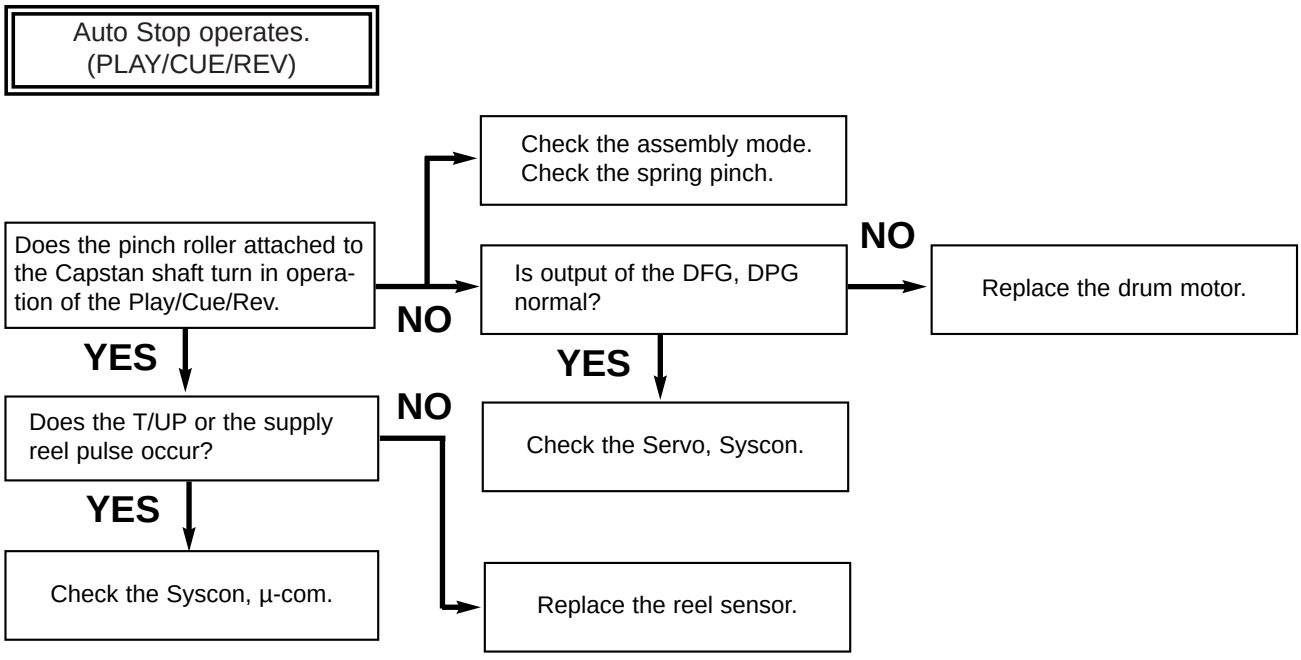
Auto Stop operates.
(PLAY/CUE/REV)
Does the pinch roller attached to the Capstan shaft turn in operation of the Play/Cue/Rev.
NO
Check the assembly mode.
Check the spring pinch.
Is output of the DFG, DPG normal?
NO
Replace the drum motor.
YES
YES
Check the Servo, Syscon.
Does the T/UP or the supply reel pulse occur?
NO
YES
Check the Syscon, µ-com.
Replace the reel sensor.

D.

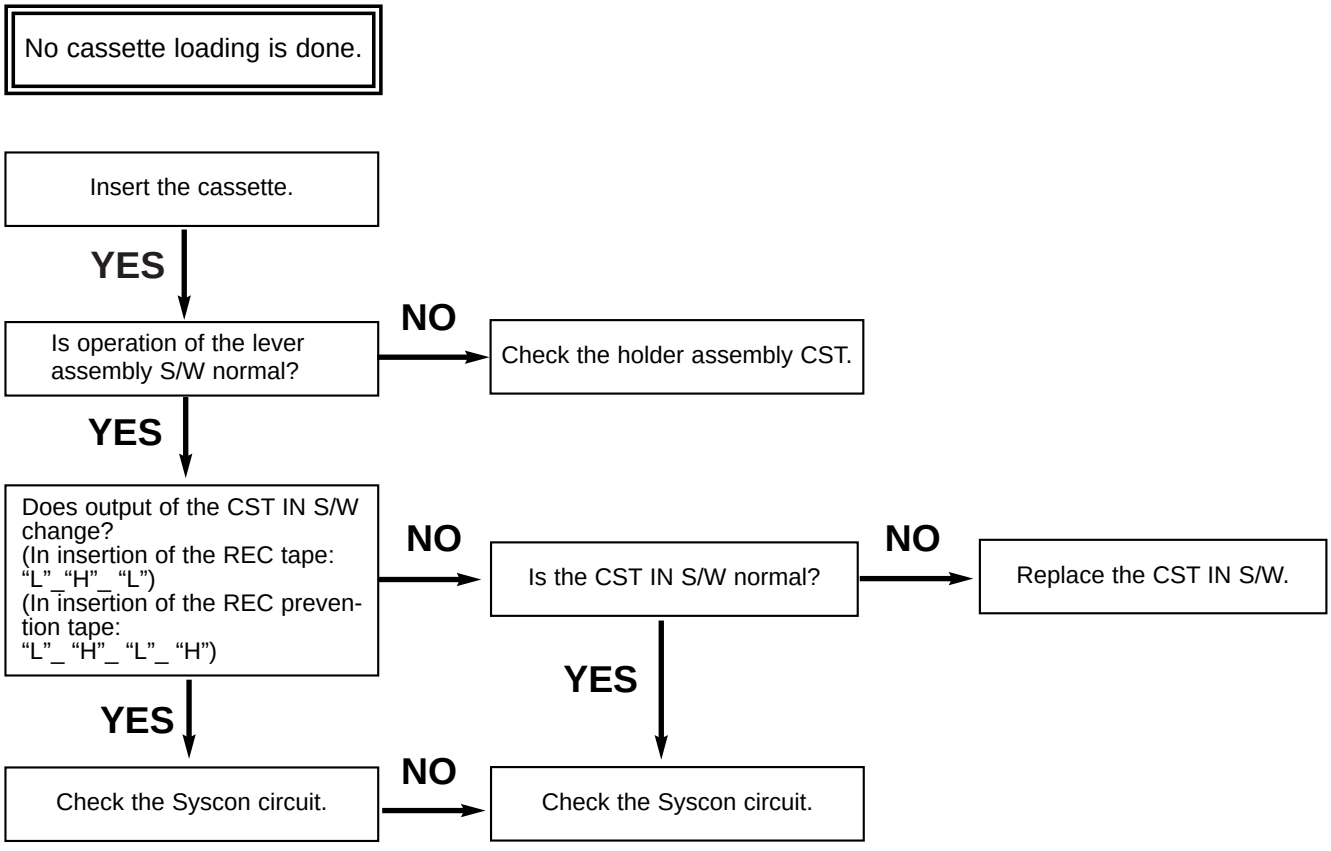
No cassette loading is done.
Insert the cassette.
YES
Is operation of the lever assembly S/W normal?
NO
Check the holder assembly CST.
YES
Does output of the CST IN S/W change?
(In insertion of the REC tape:
“L”_“H”_“L”)
(In insertion of the REC prevention tape:
“L”_ “H”_ “L”_ “H”)
NO
Is the CST IN S/W normal?
NO
Replace the CST IN S/W.
YES
YES
Check the Syscon circuit.
NO
Check the Syscon circuit.

E.

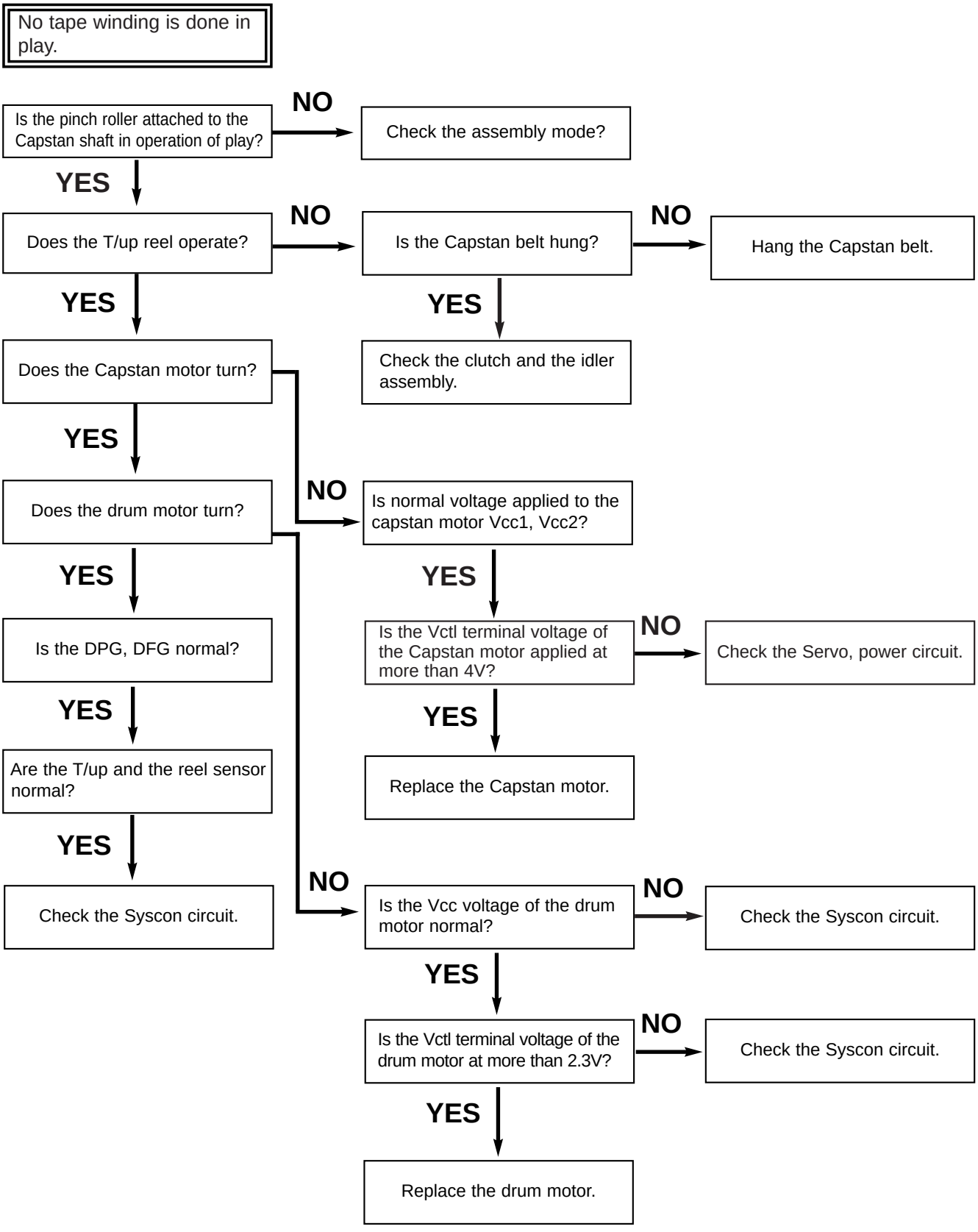
No tape winding is done in play.
Is the pinch roller attached to the Capstan shaft in operation of play?
NO
Check the assembly mode?
YES
Does the T/up reel operate?
NO
Is the Capstan belt hung?
NO
Hang the Capstan belt.
YES
YES
Check the clutch and the idler assembly.
Does the Capstan motor turn?
YES
Does the drum motor turn?
NO
Is normal voltage applied to the capstan motor Vcc1, Vcc2?
YES
YES
Is the Vctl terminal voltage of the Capstan motor applied at more than 4V?
NO
Check the Servo, power circuit.
Is the DPG, DFG normal?
YES
YES
Replace the Capstan motor.
Are the T/up and the reel sensor normal?
YES
NO
Check the Syscon circuit.
Is the Vcc voltage of the drum motor normal?
NO
Check the Syscon circuit.
YES
Is the Vctl terminal voltage of the drum motor at more than 2.3V?
NO
Check the Syscon circuit.
YES
Replace the drum motor.

2. Front Loading Mechanism

A.

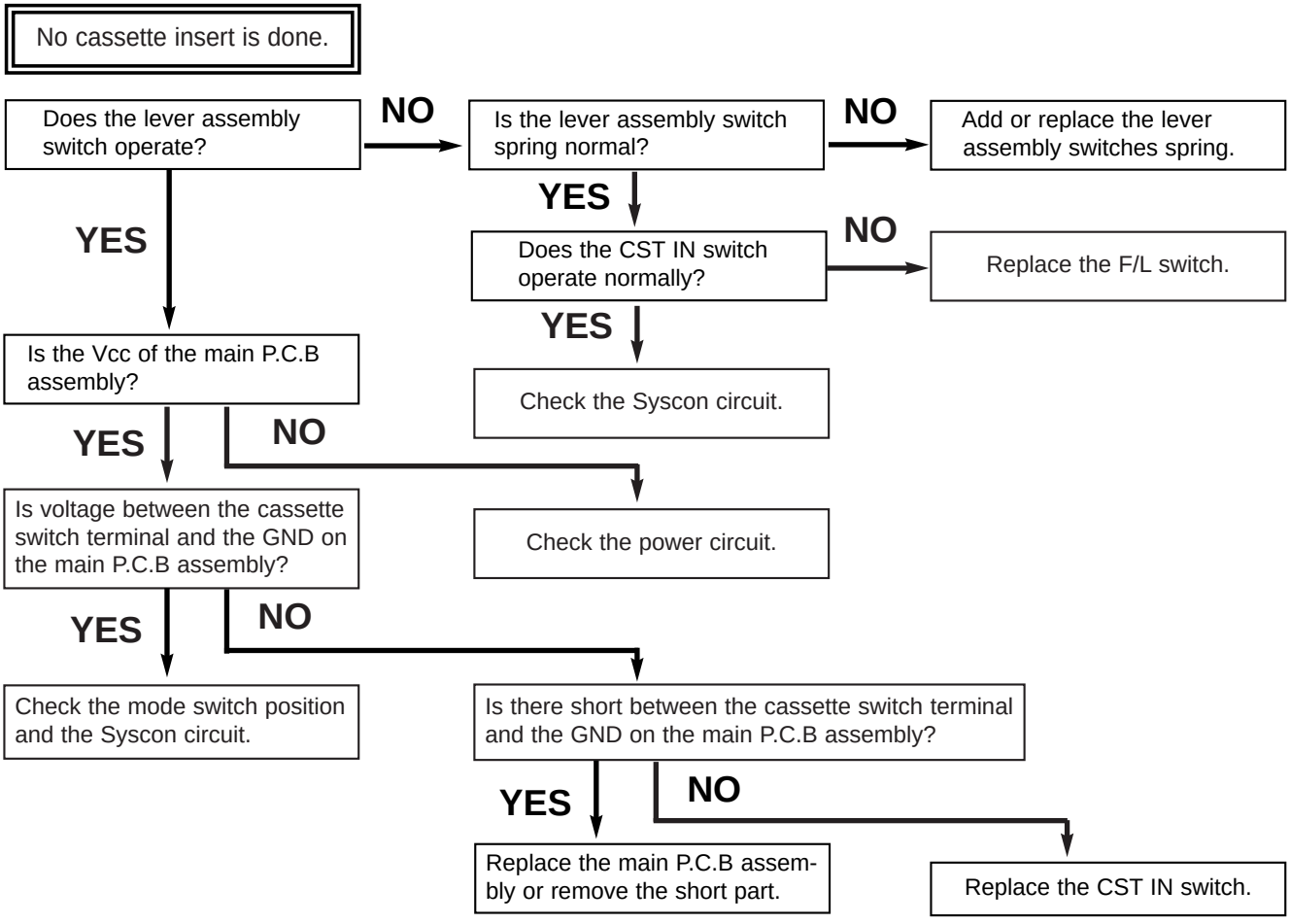

B.

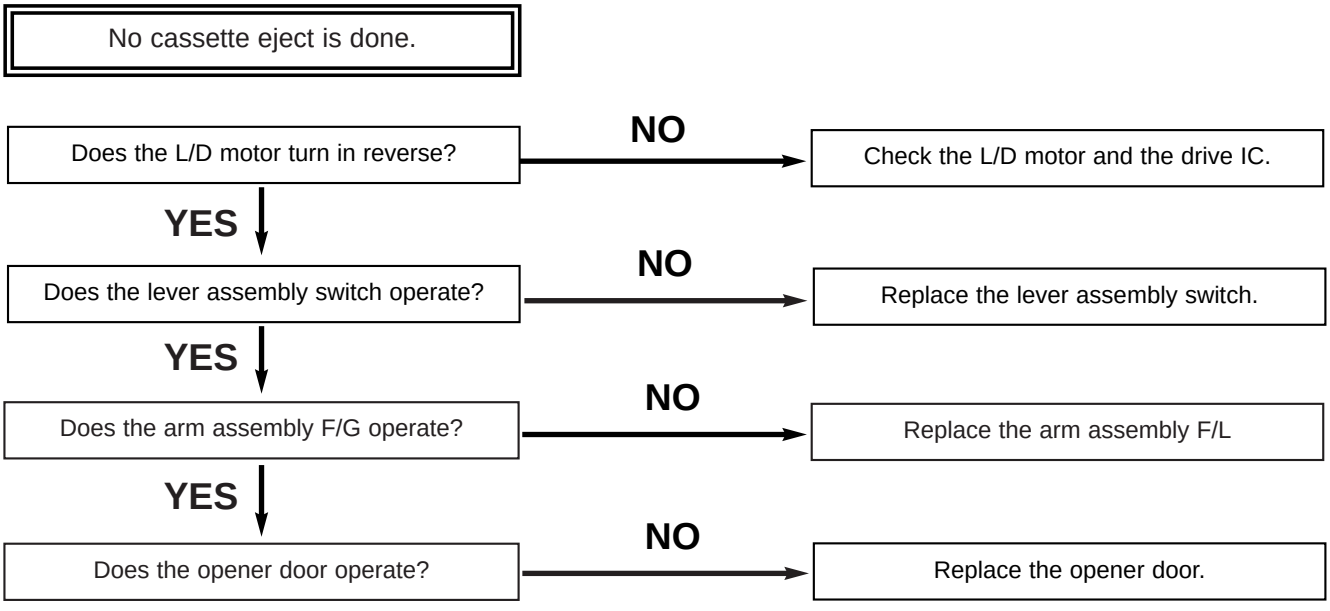

C.

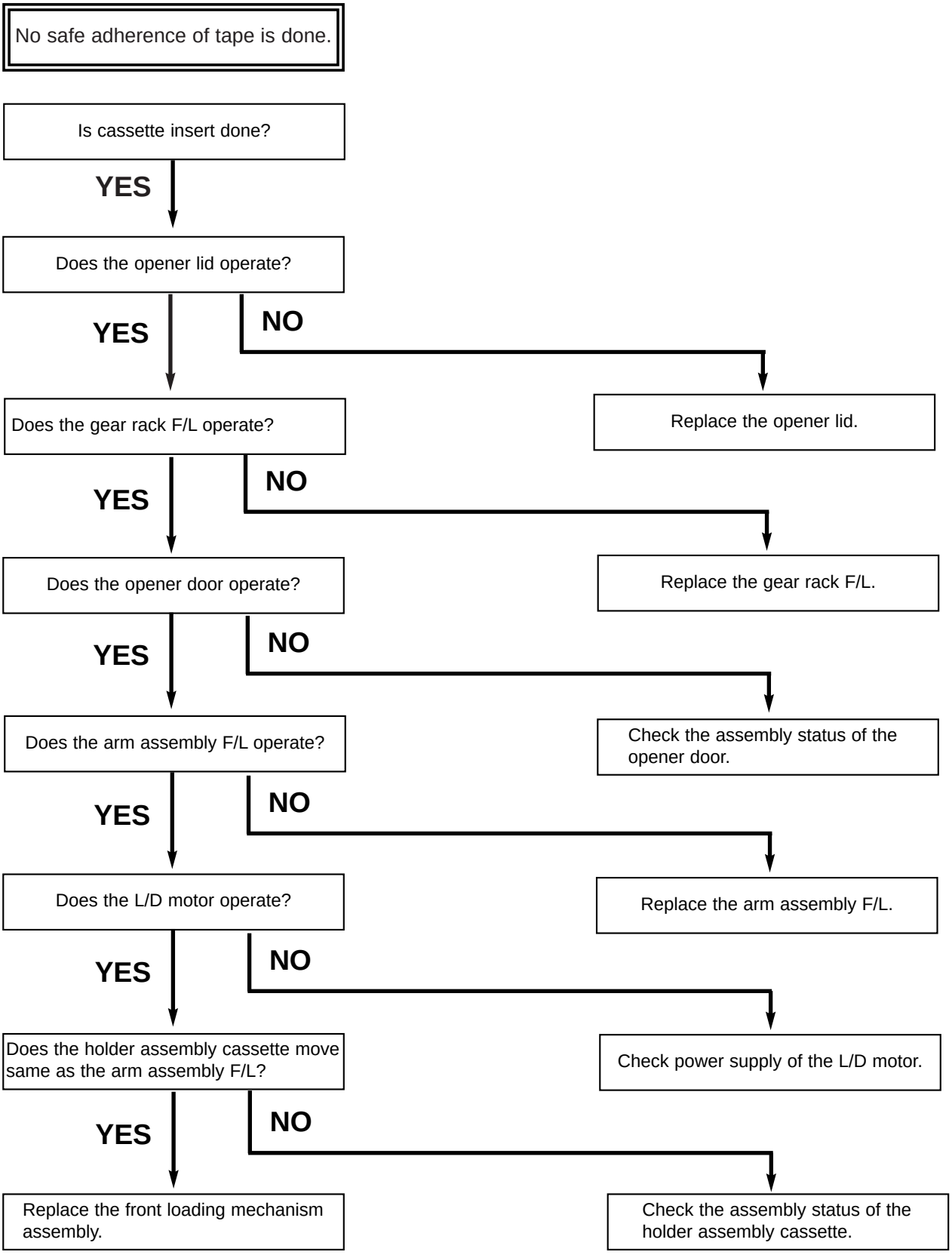
No safe adherence of tape is done.
Is cassette insert done?
YES
Does the opener lid operate?
YES
NO
Replace the opener lid.
Does the gear rack F/L operate?
YES
NO
Replace the gear rack F/L.
Does the opener door operate?
YES
NO
Check the assembly status of the opener door.
Does the arm assembly F/L operate?
YES
NO
Replace the arm assembly F/L.
Does the L/D motor operate?
YES
NO
Check power supply of the L/D motor.
Does the holder assembly cassette move same as the arm assembly F/L?
YES
NO
Replace the front loading mechanism assembly.
Check the assembly status of the holder assembly cassette.

EXPLODED VIEWS

1. Front Loading Mechanism Section

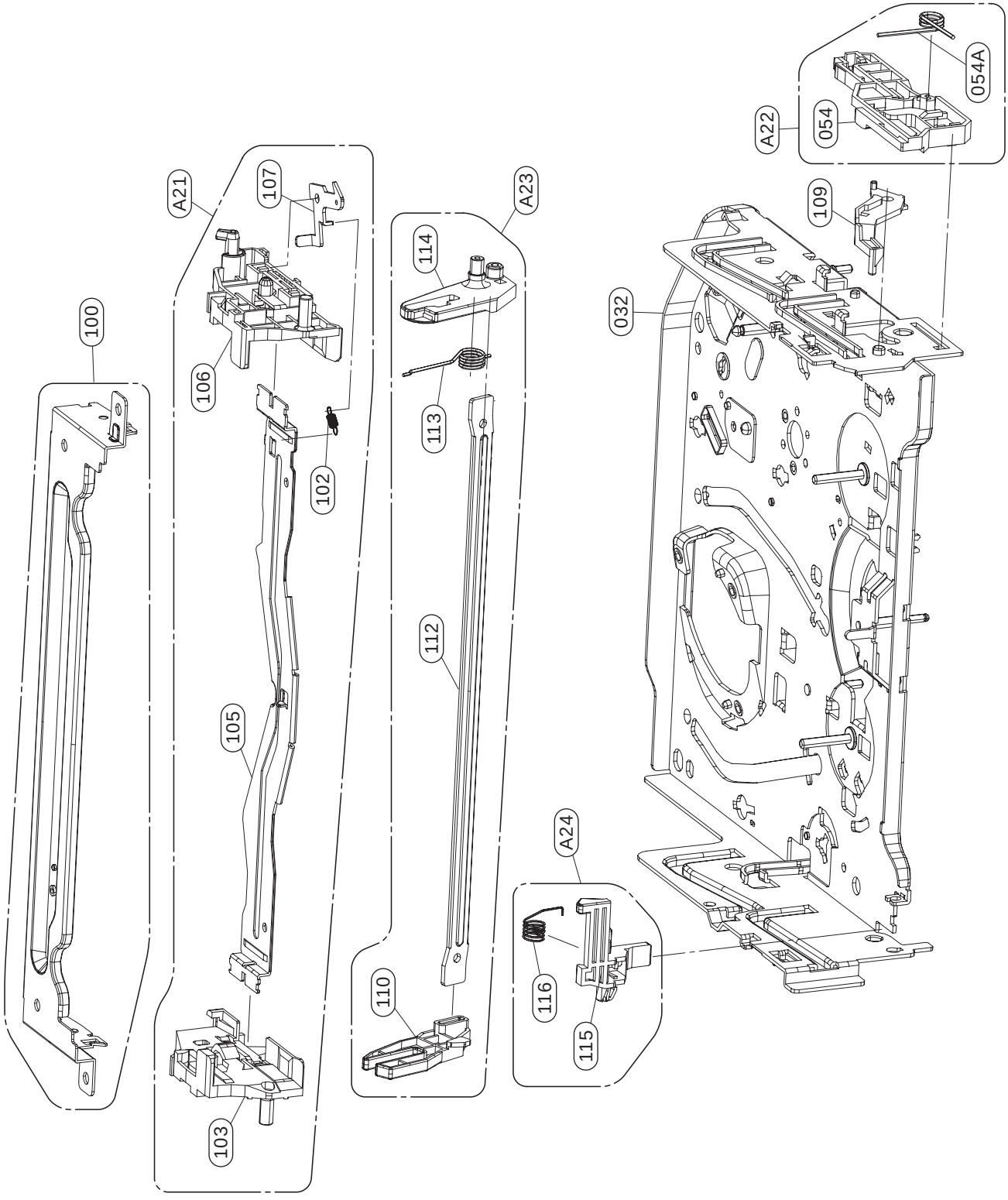

2. Moving Mechanism Section (1)

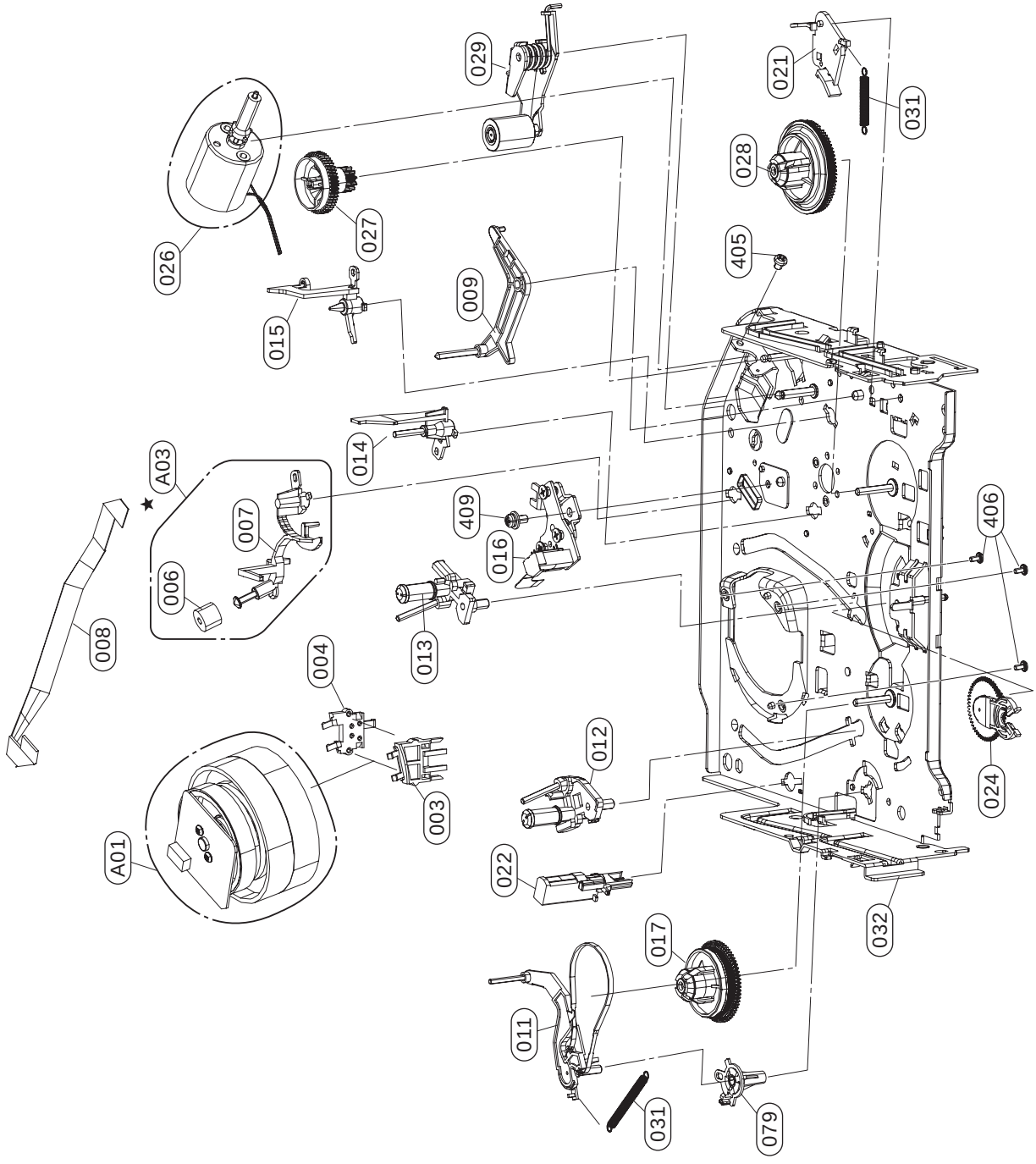

3. Moving Mechanism Section (2)

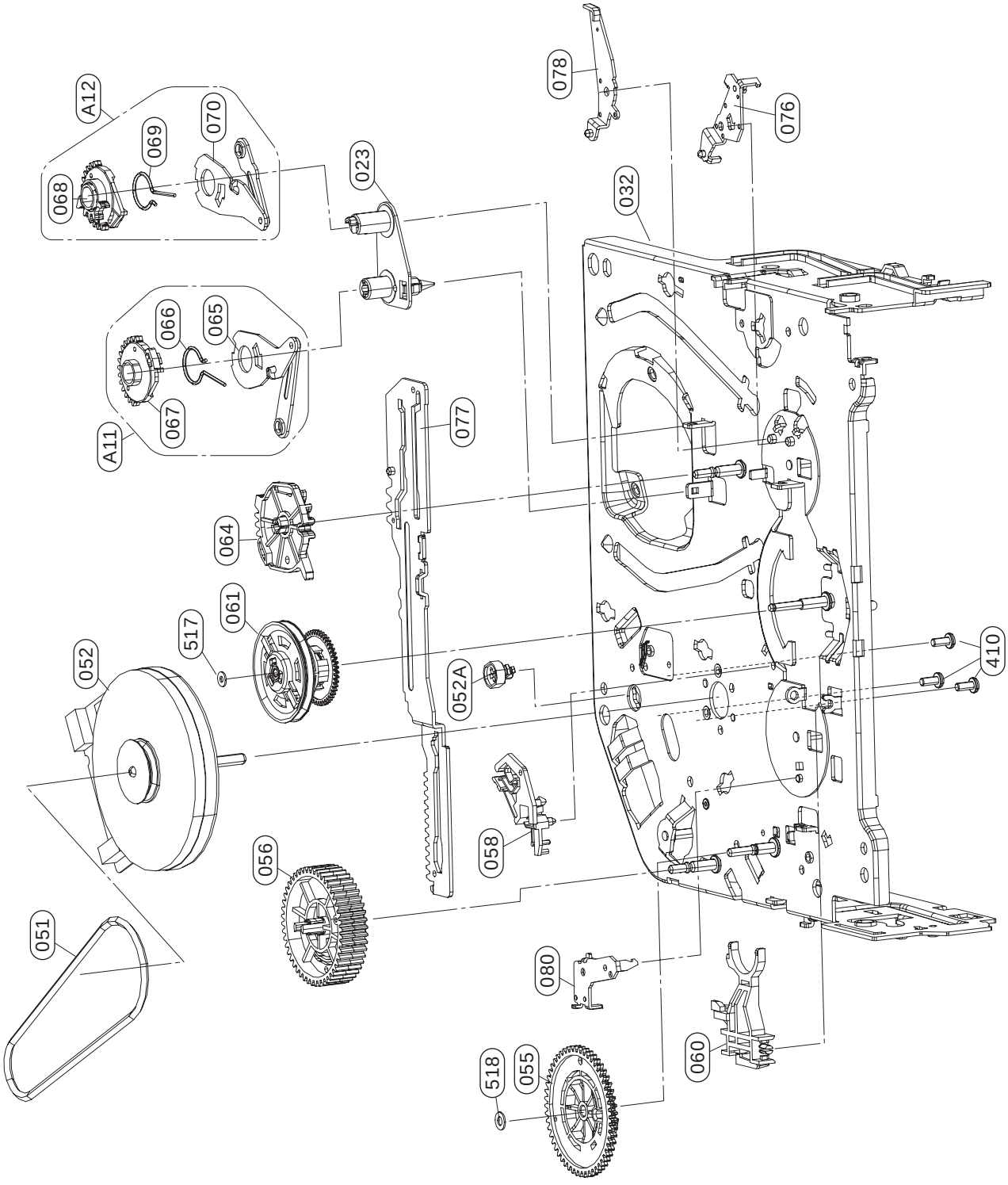

MEMO

SECTION 5 MECHANISM OF DVD PART (DP-10C)

CONTENTS

DECK MECHANISM PARTS LOCATIONS

- **Top View.....5-1**
- **Top View(without Tray Disc) 5-1**
- **Bottom View 5-1**

DECK MECHANISM DISASSEMBLY

1. Main Base 5-2

1-1. Clamp Assembly Disc.....5-2
1-1-1. Plate Clamp 5-2
1-1-2. Magnet Clamp 5-2
1-1-3. Clamp Upper.....5-2

2. Tray Disc 5-2

3. Base Assembly Sled 5-3

3-1. Gear Feed.....5-3
3-2. Gear Middle 5-3
3-3. Gear Rack.....5-3

4. Rubber Rear.....5-3

5. Frame Assembly Up/Down 5-4
6. Belt Loading.....5-4
7. Gear Pulley 5-4
8. Gear Loading 5-4
9. Guide Up/Down.....5-4
10. PWB Assembly Loading 5-4
11. Base Main.....5-4

EXPLODED VIEW

1. Deck Mechanism Exploded View....5-5

DECK MECHANISM PARTS LOCATION

• Top View (With Tray)

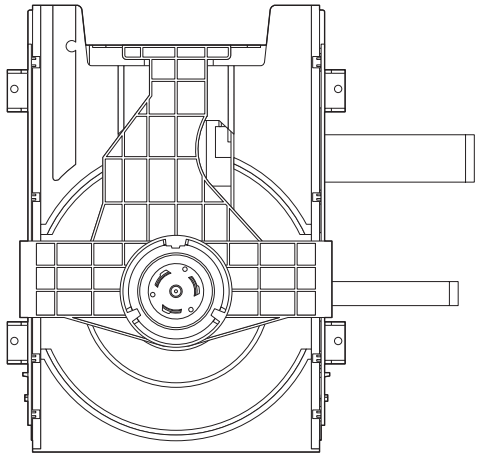

• Top View (Without Tray)

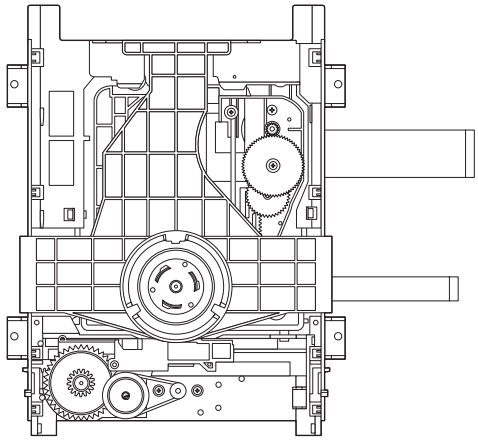

• Bottom View

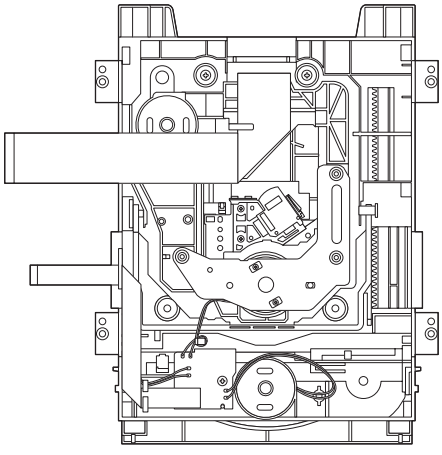

Procedure Starting No.		Parts	Fixing Type	Disassembly	Figure
	1	Main Base			5-1
1	2	Clamp Assembly Disc			5-1
1, 2	3	Plate Clamp			5-1
1, 2, 3	4	Magnet Clamp			5-1
1, 2, 3, 4	5	Clamp Upper			5-1
1	6	Tray Disc			5-2
1, 6	7	Base Assembly Sled			5-3
1, 2, 6	8	Gear Feed	4 Screws, 1 Connector 1 Locking Tabs		5-3
1, 2, 6, 8	9	GearMiddle			5-3
1, 2, 6, 8, 9	10	Gear Rack	1 Screw		5-3
1, 2, 7	11	Rubber Rear			5-3
1, 2, 7	12	Frame Assembly Up/Down	1 Screw	Bottom	5-4
1, 2	13	Belt Loading	1 Locking Tab		5-4
1, 2 ,13	14	Gear Pulley			5-4
1, 2, 13, 14	15	Gear Loading	1 Locking Tab		5-4
1, 2, 7, 12, 13, 14	16	Guide Up/Down			5-4
1, 2, 13	17	PWB Assembly Loading	1 Locking Tab 1 Hook 2 Screw	Bottom	5-4
1, 2, 7, 12, 13, 14, 15, 16, 17	18	Base Main	2 Locking Tabs		5-4

Note

When reassembling, perform the procedure in reverse order.

The “Bottom” on Disassembly column of above Table indicates the part should be disassembled at the Bottom side.

DECK MECHANISM DISASSEMBLY

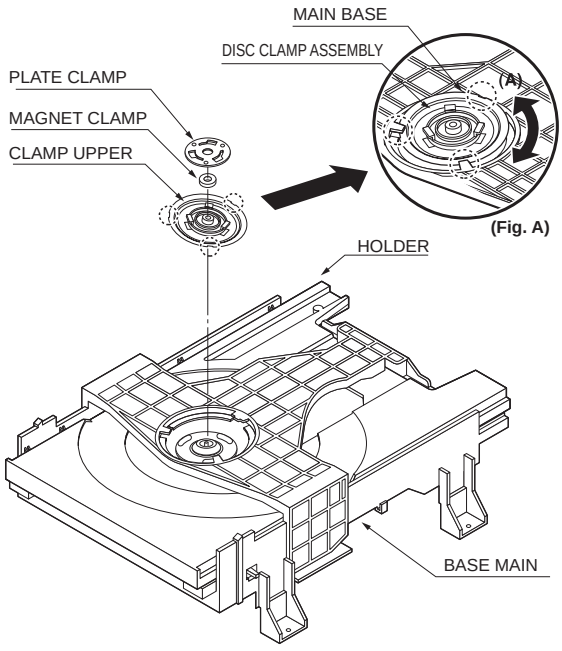

Fig. 5-1

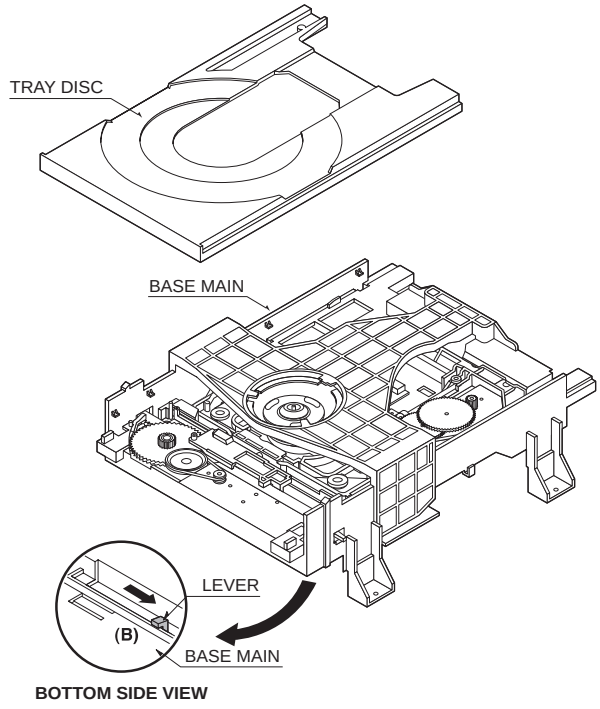

Fig. 5-2

1.Main Base (Fig. 5-1)

1-1. Clamp Assembly Disc

1) Place the Clamp Assembly Disc as Fig. (A)
2) Lift up the Clamp Assembly Disc in direction of arrow(A).
3) Separate the Clamp Assembly Disc from the Holder Clamp.

1-1-1. Plate Clamp

1) Turn the Plate Clamp to counterclockwise direction and then lift up the Plate Clamp.

1-1-2. Magnet Clamp

1-1-3. Clamp Upper

2. Tray Disc (Fig. 5-2)

1) Insert and push a Driver in the emergency eject hole(A) at the right side, or put the Driver on the Lever(B) of the Gear Emergency and pull the Lever(B) in direction of arrow so that the Tray Disc is ejected about 15~20mm.
2) Pull the Tray Disc until it is separated from the Base Main completely.

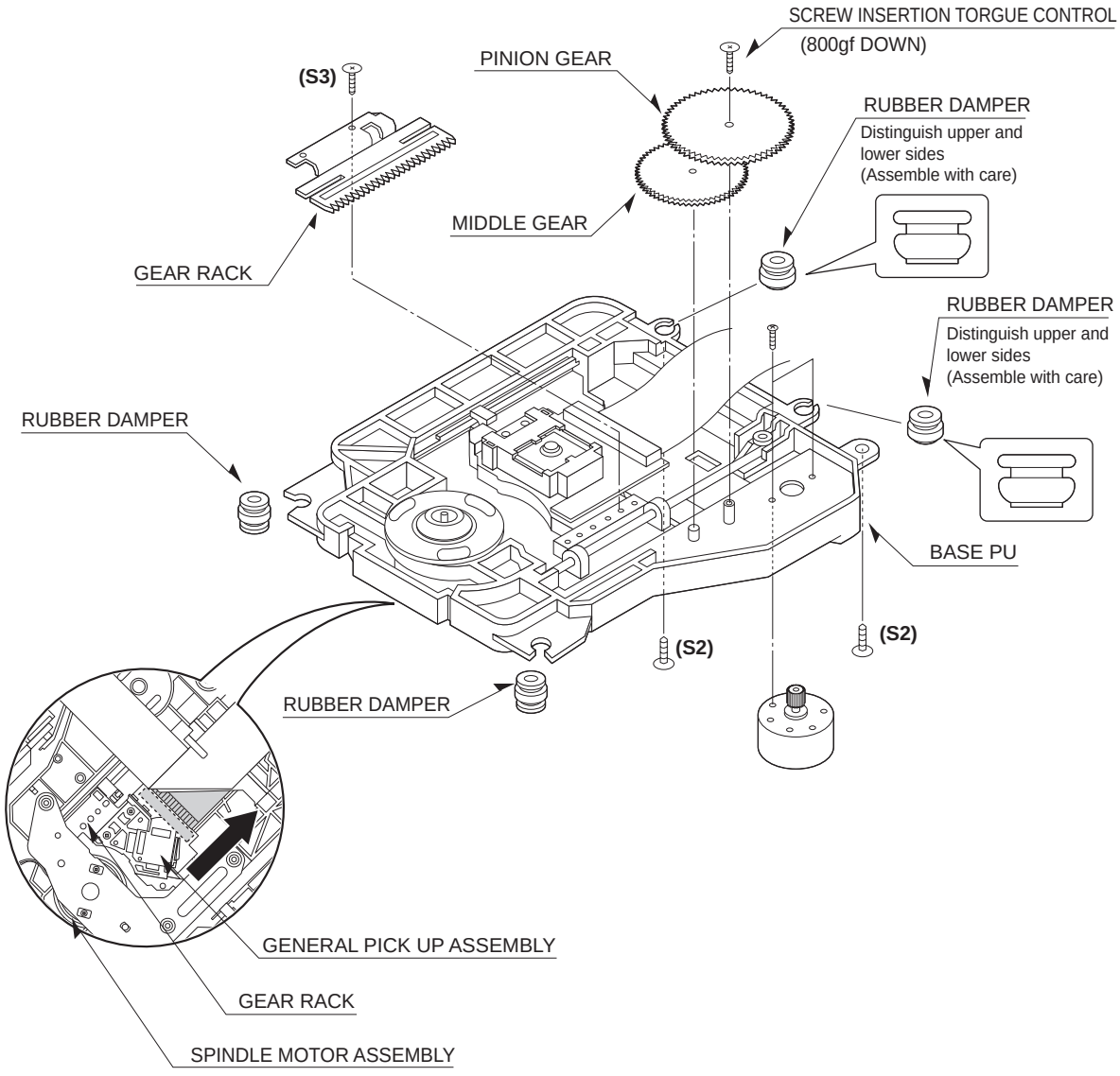

Fig. 5-3

3. Base Assembly Sled (Fig. 5-3)

1) Release 4 Screw(S2).
2) Disconnect the FFC Connector(C1)

3-1. Gear Feed

3-2. Gear Middle

3-3. Gear Rack

1) Release the Scerw(S3)

4. Rubber Rear (Fig. 5-3)

DECK MECHANISM DISASSEMBLY

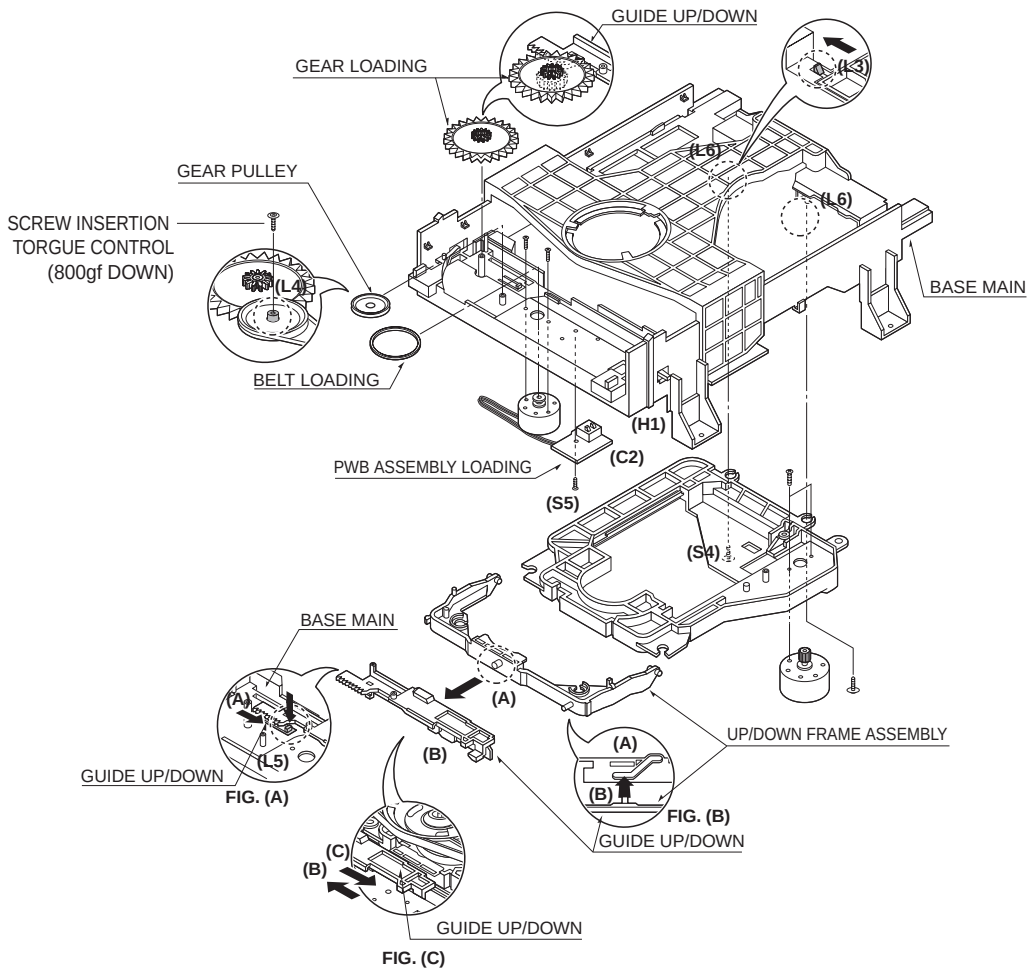

Fig. 5-4

5. Frame Assembly Up/Down (Fig. 5-4)

Note

Put the Base Main face down(Bottom Side)

1) Release the screw(S4)
2) Unlock the Locking Tab(L3) in direction of arrow and then lift up the Frame Assembly Up/Down to separate it from the Base Main.

Note

- When reassembling move the Guide Up/Down in direction of arrow(C) until it is positioned as Fig.(C).
- When reassembling insert (A) portion of the Frame Assembly Up/Down in the (B) portion of the Guide Up/Down as Fig.(B)

6. Belt Loading(Fig. 5-4)

Note

Put the Base Main on original position(Top Side)

7. Gear pulley (Fig. 5-4)

1) Unlock the Locking Tab(L4) in direction of arrow(B) and then separate the Gear Pulley from the Base Main.

8. Gear Loading (Fig. 5-4)

9. Guide Up/Down (Fig. 5-4)

1) Move the Guide Up/Down in direction of arrow(A) as Fig.(A)
2) Push the Locking Tab(L5) down and then lift up the Guide Up/Down to separate it from the Base Main.

Note

When reassembling place the Guide Up/Down as Fig.(C) and move it in direction arrow(B) until it is locked by the Locking Tab(L5). And confirm the Guide Up/Down as Fig.(A)

10. PWB Assembly Loading (Fig. 5-4)

Note

Put the Base Main face down(Bottom Side)

1) Release 1 Screws(S5)
2) Unlock the Loading Motor (C2) from the Hook (H1) on the Base Main.
3) Unlock 2 Locking Tabs(L6) and separate the PWB Assembly Loading from the Base Main.

11. Base Main(Fig. 5-4)

MEMO

EXPLODED VIEWS

1. DECK MECHANISM EXPLODED VIEW(DP-10C)

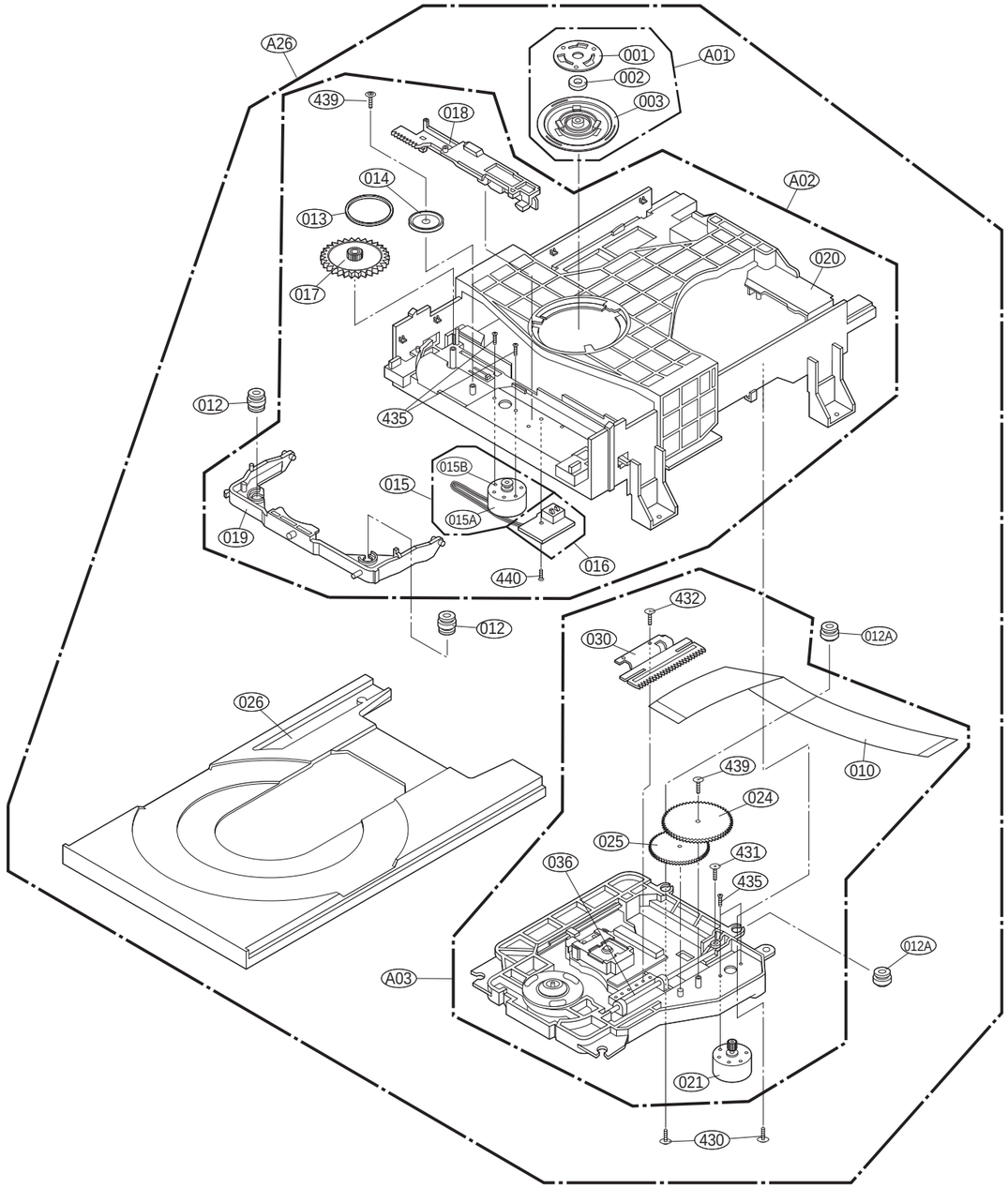

MEMO

MEMO